NATIONAL SEEDS CORPORATION LIMITED

(A GOVERNMENT OF INDIA UNDERTAKING-MINIRATNA COMPANY)
REGIONAL OFFICE: BANGALORE
(CIN NO: U 74899 DL 1963 GOI 003913)

TERMS & CONDITIONS OF E-TENDER/ CONTRACT

FOR

Name of work - Construction of Seed Storage Godown of Capacity 20,000 qtls at National Seeds Corporation Ltd, Haveri, RO, Bangalore (Karnataka).

TENDER SHOULD BE SUBMITTED IN TWO BIDS SYSTEM ONLINE

DATE OF PUBLISHING: 06.12.2017 at 10:00 hours
TENDER DOCUMENT AVAILABLE FOR ONLINE SUBMISSION: 13.12.2017 UP TO 14:00 hours.
on NSC e-Portal: http//indiaseeds.eproc.in

OPENING OF TENDER (TECHNICAL BID): on 13.12.2017 at 15:30 hours

COST OF TENDER FORM: Rs. 2500/- (Rs. Two thousand five hundred only) paid online only

Contact details:

Particulars	Telephone	E-mail	Fax
Head Office New Delhi	011-25842209	dgmensc@gmail.com	011- 25841337
Regional Office - Bangalore	080-23416824	nscl.bangalore@gmail.com	080-23410328
Area Office - Haveri	08375-239111	nsc.haveri@gmail.com	08375-235219
Website	**www.indiaseeds.com**		

Signature :-
Subject : CN=ASHWIN D, SERIALNUMBER=2035d4fe20bae89488f496e7d7fdab3e3fcc14
6a393f599e6d567e6c881eb03, ST=KARNATAKA, OID.2.5.4.17=560024, OU=
MANAGEMENT, O=NATIONAL SEEDS CORPORATION LTD, C=IN
User ID : ashwin.d
Serial No : D251AF

INDEX

S.No.	DESCRIPTION	PAGE No.
1	Notice Inviting E-Tender (NIT)	3
2	**PART-A**	4
	SECTION -1	
3	Instructions to Tenderers - online mode	5
	SECTION –II	
4	General Rule & guidance for E-Tender	7
	SECTION –III	
5	General Terms & Condition of Contract	10
6	Clause of Contract	15
7	Safety Code	47
8	Model Rules for the Protection of Health and Sanitary Arrangements	52
9	Contractor Labour Regulations	58
10	Appendix I to XIII	63
11	List of Acts and omissions	64
	SECTION - IV	
12	Performa of Schedule	65
13	Specification & conditions for Modification and dismantling work	70
14	Additional specification for electrical work	72
	SECTION-V	
15	Form of Technical Bid	76
	SECTION-VI	
16	Form of Performance Guarantee	80
17	Form of Agreement	81
18	Affidavit	83
	PART-B	84
	SECTION - VII	
19	Form of Price Bid	
	Schedule –Part-A Civil & Electrical work	85
	Schedule –Part-B Roofing work	95
	Schedule- E	97
20	Tender Drawings- site, building & layout plan	98
21	Check list for Technical Qualifying	101

Signature :-
Subject : CN=ASHWIN D, SERIALNUMBER=2035d4fe20bae89488f496e7d7fdab3e3fcc14:
6a393f599e6d567e6c881eb03, ST=KARNATAKA, OID.2.5.4.17=560024, OU=
MANAGEMENT, O=NATIONAL SEEDS CORPORATION LTD, C=IN
User ID : ashwin.d
Serial No : D251AF

NATIONAL SEEDS CORPORATION LIMITED

(A GOVT. OF INDIA UNDERTAKING MINIRATNA COMPANY)
REGIONAL OFFICE: BANGALORE-560024 (KARNATAKA)
(CIN NO: U 74899 DL 1963 GOI 003913)

No. Engg(HVR)/NSC-BNG/2017-18 Date: 05.12.2017

NOTICE INVITING E-TENDER

National Seeds Corporation Ltd. (NSC), Regional Office, Bangalore – 560024 (Karnataka) invites online e-tenders under two bid system from reputed and eligible Contractors registered in appropriate class with CPWD/PWD/Municipal Authorities/Semi Govt. Organization and having experience for successful execution of at least three similar works of 40% value or two similar works of 50% value or one similar work of 80% value of the estimated cost of tender executed during the last five years & having EPF & ESI Registration for Laborers for:-

1. Name of Work	Construction of Seed Storage Godown of capacity 20,000 qtls
2. Location	National Seeds Corporation Ltd, Haveri, RO Bangalore (Karnataka).
3. Estimated cost	Part – A: Rs. 108.75 Lakh (For Civil works & Electrical installations in Seed storage godown) Part – B: Rs 29.70 Lakh (For Truss less arched roof using Galvalume sheet 1.3 mm thick for Seed storage godown)
4. Completion Period	Part – A: Five months (Civil & Electrical work excluding roofing work) Part – B: One month (Roofing work)
5. Earnest Money	₹ 2,70,000/- (Rupees Two lakh seventy thousand only).
6. Date & Time for submission of e-tender	13.12.2017 up to 14:00 hours.
7. Date & Time of opening of e-tender	13.12.2017 at 15:30 hours.

1. Tender document will be available on NSC e-Portal: **https://indiaseeds.eproc.in** up to 13.12.2017 till 14:00 hours for uploading.
2. The eligibility criteria for participation are given in the tender document.
3. Tender EMD amount should be submitted online along with cost of tender document.
4. ***Technical bid*** *will be opened on 13.12.2017 at 15:30 hours in presence of bidders or their authorized representatives who wish to participate in the opening of tender.*
5. ***Price bid*** *will be opened on 15.12.2017 at 10:00 hours in presence of bidders or their authorized representatives who wish to participate in the opening of tender*
6. Tenderers should submit both Technical bid and Price bid strictly as per instructions given in Part-A of the tender documents.
7. Tenders not accompanied with requisite amount of EMD & Tender cost and not submitted as per instructions contained in the tender document are liable for rejection.
8. Micro Small Enterprises registered with MSEs/NSIC for the quoted item under single point registration scheme are exempted from payment of cost of tender document and EMD as well as entitle to avail the benefit of Public Procurement Policy for Micro and Small Enterprises (MSEs) 2012, according to the policy approved in the NSC subject to furnishing documentary proof in support of their claim along with their request.
9. The successful bidders have to sign "**Integrity Pact**" with NSC.
10. The Corporation reserves the right to accept or reject any/all tenders without assigning any reason whatsoever and decision of the Corporation shall be final and binding on tenderer.

----Sd-----
Regional Manager

Signature :-
Subject : CN=ASHWIN D, SERIALNUMBER=2035d4fe20bae89488f496e7d7fdab3e3fcc14
6a393f599e6d567e6c881eb03, ST=KARNATAKA, OID.2.5.4.17=560024, OU=
MANAGEMENT, O=NATIONAL SEEDS CORPORATION LTD, C=IN
User ID : ashwin.d
Serial No : D251AF

PART- A

Signature :-
Subject : CN=ASHWIN D, SERIALNUMBER=2035d4fe20bae89488f496e7d7fdab3e3fcc14
6a393f599e6d567e6c881eb03, ST=KARNATAKA, OID.2.5.4.17=560024, OU=
MANAGEMENT, O=NATIONAL SEEDS CORPORATION LTD, C=IN
User ID : ashwin.d
Serial No : D251AF

SECTION - I

INSTRUCTIONS TO TENDERERS – ONLINE MODE

DEFINITIONS: C1 India Private Limited: Service provider to provide the e-Tendering Software.

NSCL e-Procurement Portal: An e-tendering portal of National Seeds Corporation Limited ("NSCL") Introduced for the process of e-tendering which can be accessed on https://indiaseeds.eproc.in.

(1). ACCESSING / PURCHASINGOF BID DOCUMENTS:

It is mandatory for all the bidders to have Class-III Digital Signature Certificate (With Both DSC Components, i.e. Signing & Encryption) from any of the licensed Certifying Agency (Bidders can see the list of licensed CA's from the link www.cca.gov.in) to participate in e-tendering of NSCL.

C1-IndiaPvt.Ltd. facilitates for procurement of Class-III DSC's. DSC Procurement request may be sent to jatin.kalra@c1india.com for more details during NSCL working days.

To participate in the e-bid, it is mandatory for the Applicants to get themselves registered with the NSCL e-Tendering Portal (https://indiaseeds.eproc.in), to have a User ID & Password which has to be obtained by submitting a non-refundable annual registration charges of Rs.3416/-inclusive of all taxes in favour of M/s C1 India Private Limited through Online mode. Validity of Registration is ONE Year. After making the payment through online mode (i.e.Net banking, Debit card, Credit Card), Vendors have to send an e-mail intimation nsclsupport@c1india.com to Helpdesk for their profile activation. The account will be activated within 24 working Hours. All profile activations will be done only during NSCL working days. No profile activation will take place during NSCL Holidays & Gazette holidays.

To participate in bidding, bidders have to pay Tender Processing Fee of Rs.570/-inclusive of all taxes (Non-refundable) through online mode (Internet banking/Debit card/Credit card).

To participate in bidding, bidders have to pay Tender Document (Non-Refundable) and EMD (Refundable) as per the amount mentioned in the tender document through Online from https://indiaseeds.eproc.in.

Both 'EMD' and 'Tender Document Fee' are mentioned in individual tender document as published at NSCL e-Tendering Portal (https://indiaseeds.eproc.in). The bidders who are MSE and registered with NSIC are exempted from paying EMD and tender document cost, for which they have to submit the documentary proof.

The amendments / clarifications to the tender, if any, will be posted on the NSCL e-Tendering Portal (https://indiaseeds.eproc.in).

For help desk, please contact e-Tendering Cell and Help Desk Support.
NSCL Global Support E-Mail Id: nsclsupport@c1india.com
NSCL Global Support Telephone: +91-124-4302033 / 36 / 37 during Monday to Friday between 9.00 to 7.00 Hrs

(2). PREPARATION SUBMISSION OF APPLICATION

Detailed NIT may be downloaded from NSCL e-tendering portal and the Application may be submitted compulsorily online mode following the instructions appearing on the screen /NIT.

Tenderer / Bidder can pay tender document Fee as per tender document online through Internet Banking / Debit Card / Credit Card.

A Tenderer / Bidder manual containing the detailed guidelines for e-tendering system is also available on the portal.

(3). MODIFICATION/SUBSTITUTION/WITHDRAWAL OF BIDS:

The Bidder may modify, substitute or withdraw its e-bid after submission prior to the Bid Due Date. No Bid shall be modified, substituted or withdrawn by the Bidder on or after the Bid Due Date. Any alteration / modification in the Bid or additional information supplied subsequent to the Bid Due Date,

unless the same has been expressly sought for by the NSCL, shall be disregarded.

For modification of e-bid, bidder has to decrypt its old bid from e-tendering portal and upload /resubmit digitally signed modified bid. For withdrawal of bid, bidder has to click on withdrawal icon at e-tendering portal and can withdraw its e-bid.

(4). OENING AND EVALUATION OF APPLICATIONS

Opening of Applications will be done through online process. However, Corporation reserves the right for evaluation and decision based on tender submitted online. NSCL shall open documents of the Application received in electronic form of the tender on the Application due date i.e., in the presence of the Applicants who choose to attend. NSCL will subsequently examine and evaluate the Applications in accordance with the provisions set out in the Tender Document. The price bid will be opened of the responsive applicants. The date of opening of price bid will be notified later on.

(5). DISCLAIMER:

The vender must read all the instruction in the RFP and submit the same accordingly.

.

Signature :-
Subject : CN=ASHWIN D, SERIALNUMBER=2035d4fe20bae89488f496e7d7fdab3e3fcc14
6a393f599e6d567e6c881eb03, ST=KARNATAKA, OID.2.5.4.17=560024, OU=
MANAGEMENT, O=NATIONAL SEEDS CORPORATION LTD, C=IN
User ID : ashwin.d
Serial No : D251AF

SECTION - II

Instruction to Tenderers

GENERAL RULES AND GUIDANCE FOR INVITING E-TENDER

1. The e-tender is being invited by the Regional Manager, National Seeds Corporation Limited, Bangalore.
2. The contractor should read the specifications carefully before submitting e-tender.
3. Contractors should be registered in appropriate class with CPWD/ PWD/ Municipal Authorities/ Semi Govt. Organization and having experience of successful execution of at least three similar works of 40% value or two similar works of 50% value or one similar work of 80% value of the estimated cost of tender executed during the last five years.
4. The earnest money as per Notice should accompany the e-tender in the shape of online payment only. Contractors/firm who are registered with MSME are exempted for submitting the tender fees as well as EMD.
5. (a) The tenderer will be required to attach Income Tax Return for the last 3 years and Registration No. of GST/SST/CST/VAT, ESI and PF while applying for e-tender through online.

   (b) The contractor will have to give an undertaking that he will submit the proof of remittance of PF/ESI through challan at the time of bill payment. In case of non furnishing of such proof, 4.7% (four point seven percent) of the value of the bill amount of work shall be withheld by NSC which can be released only after production of the required document. If it is incumbent upon NSC to deposit withheld amount with EPF authorities, the same shall be deposited by NSC with EPF authorities. After deposition of the amount, NSC shall not refund this to the contractor even on production of EPF Challans.

   (c) NSC shall also recover Workmen Cess @ 2% from each RA bill and shall deposit with the Labor Board of the concerned state. In case the Labor Board is not established in the state, recovery made by NSC shall be retained under suspense and will be deposited with the Labor Board as & when established in the state.
6. The tenderers shall submit the bid online only before the due date and time of submission.
7. Goods and Services Tax, purchase tax, work contract tax, VAT or any other tax applicable on material or services in respect of this contract shall be payable by the contractor and no claim whatsoever in this respect will be entertained. The rates quoted by the contractor shall be inclusive of all such taxes.
8. The rates quoted by the contractor in percentage above or below against the estimated cost referred in Schedule of the tender will be taken as correct and not the amounts worked out by them.
9. The contractor should quote the rates in figures as well as in words and amount tendered by him. The amount for each item should be worked out and the requisite the total given. Rates should be written in words closely followed by figures and it should not be written in the next line.
10. **Time allowed for carrying out total work will be SIX months as per Notice on page 3.**
11. Tenders shall be opened at 15:30 hours on stipulated date at above mentioned address in presence of tenderers or their authorized representatives who wish to attend.
12. Tender should remain open for acceptance for a period of 90 days from the date of receipt of tender. If any tenderer withdraws his tender before the said period or makes any modification

Signature Not Verified
Subject: CN=ASHWIN D, SERIALNUMBER=2a5516f42e8b1e5918d4458e9747aa82a3fcc4f
6a393f599e6d567e6c881eb03, ST=KARNATAKA, OID.2.5.4.17=560024, OU=
MANAGEMENT, O=NATIONAL SEEDS CORPORATION LTD, C=IN
User ID : ashwin.d
Serial No : D251AF

in the terms and conditions of the tender which are not acceptable to the department, then the corporation shall, without prejudice to any other right or remedy, be at liberty to forfeit the earnest money as aforesaid.

13. Tenders that do not fulfill any of the above conditions or are incomplete in any respect are liable to be summarily rejected.
14. The e-tenders submitted with any additional conditions are liable to summary rejection.
15. Mobilization advance shall not be applicable.
16. Certificate of financial soundness issued by the bankers with the complete address is to be submitted along with the tender.
17. In case of any tender where unit rate of any item or items appears unrealistic and the tenderer is unable to provide satisfactory explanation, such tender will be liable for rejection.
18. **The contractor should visit the site and shall satisfy himself of the conditions, the accessibility of site, the full extent and character of operation, the nature of the ground and supply conditions affecting lay out execution of the contract generally. No claim on the ground for want of knowledge in such respect will be entertained.**
19. Water & Electricity for work of what so ever purpose related to the work will be arranged by the contractor. Wherever the same is provided by the Department consumption charges shall be borne by the contractor **@ 1.5 %** of the work value.
20. Change in the terms and condition or the specifications, or schedule of completion shall not be accepted such conditional tenders shall be liable for rejection.
21. The rates shall be inclusive up to all heights, materials, labor, tools & plants and taxes etc. as per site condition.
22. The payments will be released on submission of monthly bill of work done valuing not less than one month tender amount proportionately.
23. The memorandum of work tendered for and the schedule of materials to be supplied by the NSC and their issue rates, shall be filled in and completed in the office of the Regional Manager, Bangalore before the tender form is issued. If form is issued to an intending tender without having been so filled in and complete, he shall request the officer to have this done before he completes and delivers his tender. (In this case no material is supplied by NSC, hence no need for correction)
24. Mixing of cement concrete and cement mortar shall be done by means of mechanical mixer. The cement concrete laid shall be mechanically vibrated by means of mechanically operated vibrators. The rates quoted shall be inclusive of these operations and no extra payments shall be made.
25. The receipt of clerk for any money paid by the contractor will not be considered as any acknowledgment or payment to the National Seeds Corporation and the contractor shall be responsible for seeing that he procures a receipt signed by the Accountant/Engineer or a duly authorized Cashier.
26. The contractor shall give a list of NSC employees related to him.
27. The contractor should verify all elevations shown in the drawings and in case of doubt, obtain required particulars which may in any way influence his tender from the Engineer as no allowance whatsoever will be made beyond the contract for any alleged ignorance thereof.
28. The site shown in the layout plan shall be cleared of all obstructions, loose stone, materials, rubbish of all kind. All holes or hollows whether originally existing or produced during clearance shall be carefully filled up with earth, well rammed, leveled off, as directed.
29. The successful tenderer shall deposit performance Bank guarantee/DD @ 5 % of accepted

Signature :-
Subject : CN=ASHWIN D, SERIALNUMBER=2035d4fe20bae89488f496e7d7fdab3e3fcc14:
User ID : ashwin.d
Serial No : D251AF

value of work within 15 days of letter issued in this regard.

30. The performance guarantee shall be refunded to the contractor soon after the completion of work and recording of the completion certificate.
31. The security deposit shall be debited @ 5% from the bills and will remains as such for a period of defect liability from the date of completion of work.
32. Defects arising during the defect liability guarantee period if any shall be rectified by the contractor free of cost within a fortnight as and when brought to the notice in writing or telephonically.
33. The contractor's responsibility for this contract shall commence from the date of issue of order of acceptance of tender.
34. The contractor shall comply with the clause no. 44 to furnish labor clearance certificate for refund of security and it shall be governed as per CPWD guidelines.
35. The contractor shall maintain and produce all records when called for, related to relevant Acts concerning labor engaged and construction.
36. The contractor shall bear the cost of samples and testing fee for materials tested in a laboratory approved by the Engineer-in-charge.
37. Estimated quantity may increase or decrease at the time of execution based on actual measurements against drawing and design approved by the Competent Authority.
38. The Contractor has to provide working drawings for substructure as well as super structure as per design required for executing the work while accepting work order , certification of building stability issued by Structural Engineer and completion plan approved by local authority as per Building Bylaws.
39. The Contractor has to provide final completion drawings of the structure after completion of the work.
40. The security of laborers working at site shall be responsibility of Contractor.
41. 'No' negotiation is envisaged even with a lowest party except under exceptional situations
42. The Corporation shall have the right of rejecting all or any of the tenders without assigning any reason whatsoever and will not be bound to accept the lowest tender or any of the tenders.

Signature :-
Subject : CN=ASHWIN D, SERIALNUMBER=2035d4fe20bae89488f496e7d7fdab3e3fcc14
6a393f599e6d567e6c881eb03, ST=KARNATAKA, OID.2.5.4.17=560024, OU=
MANAGEMENT, O=NATIONAL SEEDS CORPORATION LTD, C=IN
User ID : ashwin.d
Serial No : D251AF

SECTION –III

GENERAL TERMS & CONDITIONS OF THE CONTRACT

DEFINITIONS:-

1 The contract means the documents forming the tender and acceptance thereof and the formal agreement executed between the competent authority on behalf of the National Seeds Corporation Ltd, and the Contractor, together with the documents referred to therein including these conditions, the specifications, designs, drawings and instructions issued from time to time by the Engineer and all these documents taken together, shall be deemed to form the contract and shall be complementary to one another.
'Employer' means National Seeds Corporation Limited acting through its Chairman cum Managing Director including his authorized representative(s) who will employ the contractor and legal successor(s) in title and permitted assigns.

2 In the contract, the following expressions shall, unless the context otherwise requires, have the meanings, hereby respectively assignees to them:-

a) The expression 'works' or 'work' shall, unless there be something either in the subject or context repugnant to such construction, be construed and taken to mean the works by or by virtue of the contract contracted to be executed whether temporary or permanent and whether original, altered, substituted or additional.

b) The 'Site' shall mean the land and/or other places on, into or through which work to be executed under the contract or any adjacent land, path or street through which work is to be executed under the contract or any adjacent land, path or street which may allotted or used for the purpose of carrying out the contract.

c) The 'Contractor shall mean the individual or firm or company whether incorporated or not, undertaking the works and shall include the legal personal representative or such individual or the person composing such firm or company, or the successors of such firm or company and the permitted assignees or such individual, firm or company.

d) The Corporation or NSC means the National Seeds Corporation Ltd.

e) The 'Engineer' means the Engineer and includes the project Manager/ In charge who shall supervise and be in charge of the work or any other designation authorized by the Employer for the purpose of operating the contract.

f) Where the context requires, words imparting the singular only also include the plural number and vice-versa.

g) **'Specification'** means the specification referred to in the tender and any modification there of or addition there to as may from time to time be furnished approved in writing by Engineer.

h) 'District specification' means the specifications followed by the State Govt. in the area where the work is to be executed.

i) 'Approved' means approved in writings and 'approval' means approval in writing.

j) Tendered value means the value of the entire work as stipulated in the letter of award.

Signature :-
Subject : CN=ASHWIN D, SERIALNUMBER=2035d4fe20bae89488f496e7d7fdab3e3fcc14
Date : 2019.07.31 17:37:37 +05'30'
User ID : ashwin.d
Serial No : D251AF

k) Market rate shall be the rate as decided by the Engineer on the basis of the cost of the materials and labor at the site where is the work is to be executed plus the percentage mentioned in the schedule " F" to cover all over heads and profits.

l) Schedule (S) referred to in these conditions shall mean the relevant scheduled(s) annexed to the tender papers or the standard schedule of Rates of the government mentioned in Schedule "F" hereunder, with the amendments thereto issued upto the date of receipt of the tender.

WORK TO BE CARRIED OUT:

3. The work to be carried out under the Contract shall, except as otherwise provided in these conditions, include all labor, material, tool, plants, equipment and transport which may be required in preparation of and for and in the full and entire execution and completion of the works. The descriptions given in the Schedule of Quantities (Schedule-A) shall, unless otherwise stated, be held to include wastage on materials, carriage and cartage, carrying and return of empties, hoisting, setting, fitting and fixing in position and all other labors necessary in and for the full and entire execution and completion of the work as aforesaid in accordance with good practice and recognized principles.

SUFFICIENCY OF TENDER:

4. The Contractor shall be deemed to have satisfied himself before tendering as to the correctness and sufficiency of his tender for the works and of the rates and prices quoted in the schedule of quantities, which rates and prices shall, except as otherwise provided, over all his obligations under the Contract and all matters and things necessary for the proper completion and maintenance of the works.

DESCREPANCIES AND ADJUSTMENT OF ERRORS:

5. The several documents forming the contract are to be taken as mutually explanatory of one another, detailed drawings being followed in preference to small scale drawing and figure dimensions in preference to scale and the special conditions in preference to general conditions.

(i) In case of discrepancy between the schedule of Quantities, the Specifications and/or the Drawings, the following order of preference shall be observed:-

a) Description of Schedule of Quantities.

b) Particular Specification and Special Condition as per manufacturer.

c) Drawings

d) C.P.W.D. specifications

e) Indian standard specification of B.I.S.

f) If there are varying or conflicting provisions made in any one document forming part of the contract, the Acceptance Authority shall be the deciding authority with regard to the intention

Signature
Subject : CN=ASHWIN D, SERIALNUMBER=2035d4fe20bae89d88f496e7d7fdab3e3fcc14:
6a393f599e6d567e6c881eb03, ST=KARNATAKA, OID.2.5.4.17=560024, OU=
MANAGEMENT, O=NATIONAL SEEDS CORPORATION LTD, C=IN
User ID : ashwin.d
Serial No : D251AF

of the document and his decision shall be final and binding on the contractor.

g) Any error in description, quantity or rate in Schedule of Quantities or any omission there from shall not vitiate the Contract or release the Contractor from the execution of the whole or any part of the works comprised therein according to drawings and specifications or from any of his obligations under the contract.

SIGNING OF CONTRACT

6. The successful contractor, on acceptance of office tender by the accepting Authority shall, within 15 days from the stipulated date of start of the work sign the contract consisting of:

(I) The notice inviting tender, all the documents including drawings, if any forming the tender as issued at the time of invitation of tender and acceptance thereof together with any correspondence leading there to.

(II) Various standard clause with corrections up to the date stipulated in schedule "F" along with annexure there to.

(a) Model rules for the protection for the health, sanitary arrangements for workers employed by NSC or its contractors (refer page no. 51)

(b) Contractor's labor regulations **(refer page no. 57)**

(c) List of act and omissions for which fines can be imposed **(refer page no.63).**

Signature :-
Subject : CN=ASHWIN D, SERIALNUMBER=2035d4fe20bae89488f496e7d7fdab3e3fcc14
6a393f599e6d567e6c881eb03, ST=KARNATAKA, OID.2.5.4.17=560024, OU=
MANAGEMENT, O=NATIONAL SEEDS CORPORATION LTD, C=IN
User ID : ashwin.d
Serial No : D251AF

ITEM RATE TENDER

I/We hereby tender for the execution of the work for National Seeds Corporation, (A Govt. of India Undertaking) New Delhi specified in the underwritten memorandum within the time specified in such memorandum at the rates specified therein, and in accordance in all respect with the specifications, designs, drawings and instructions in written referred to rule of General Rule and Guidance and with such materials as are provided for by and in all respect in accordance with such conditions so far as applicable.

Memorandum

a) General description

b) Estimated cost

c) Earnest money → AS PER NOTICE

d) Performance Guarantee

e) Security deposit

I/We have read and examined the Notice schedules, specifications applicable, general rules and directions, conditions, schedule of rates and other documents and rules referred to in the tender document for the work.

The validity of the tender is for 90 days from the date of opening of tender.

We also undertake to furnish performance Bank guarantee/Demand Draft @ 5 % of accepted value of work within 15 days of letter issued in this regard. The performance guarantee shall be kept valid and will be refundable to us soon after the completion of work and recording of the completion certificate.

A sum of Rs ----(As per NIT) is hereby forwarded in the shape of cash/DD as earnest money.

The security deposit will be collected through deductions from the bills @ 5 % of work done till the sum along with earnest money deposited amount to 5 % of value of contract and that will be treated as security deposit.

The tender be accepted in whole or in part, I/We hereby agree (1) to abide by and fulfill all

Signature :-
Subject : CN=ASHWIN D, SERIALNUMBER=2035d4fe20bae89488f496e7d7fdab3e3fcc14
6a393f599e6d567e6c881eb03, ST=KARNATAKA, OID.2.5.4.17=560024, OU=
Location: BANGALORE
User ID : ashwin.d
Serial No : D251AF

the terms & provisions of the said conditions annexed here to and all the terms and provision contained in the notice inviting tender so far as applicable, and or in default thereof to forfeit and pay to the Corporation or their successors, the sum of money mentioned in the said conditions.

I/We agree that the said Corporation or their successor in office shall without prejudice to any other right or remedy, be at liberty to forfeit the said Performance Guarantee, otherwise said Performance Guarantee shall be retained for performance of contract onward for a period up to two months from the date of completion of work. Earnest money shall be retained by them towards security deposit mentioned against clause (e).

(ii) to execute all the works referred to in the tender documents upon the terms & conditions contained or referred to therein, and to carry out such deviations as may be ordered, up to a maximum of 100 % at the rates quoted in the tender documents and those in excess of that limit at the rates to be determined in accordance with the provisions mutually agreed.

Dated……

Signature of Contractor

Postal Address

…….

……..

……..

Witness:-

Address……

Occupation……

Witness:-……

Address:-…….

Occupation……

Signature :-
Subject : CN=ASHWIN D, SERIALNUMBER=2035d4fe20bae89488f496e7d7fdab3e3fcc14
6a393f599e6d567e6c881eb03, ST=KARNATAKA, OID.2.5.4.17=560024, OU=
MANAGEMENT, O=NATIONAL SEEDS CORPORATION LTD, C=IN
User ID : ashwin.d
Serial No : D251AF

CLAUSES OF CONTRACT

CLAUSE- 1 PERFORMANCE GUARANTEE

i. The contractor shall submit an irrevocable Performance Guarantee of 5 % (five percent) of the accepted amount in addition to other deposit mentioned elsewhere in the contract, for his proper performance of the contract agreement, (not withstanding and/or without prejudice to any other provisions in the contract) with in period specified in schedule "F" from the date of issue of letter of acceptance. This period can be further extended by the Engineer up to maximum period as specified in schedule "F" on written request of the contractor stating the reason for delays in procuring the Performance Guarantee, to the satisfaction of the Engineer. This guarantee shall be in the form of Cash (in case guarantee amount is less than Rs. 10,000/- or deposited by Demand Draft/ pay order of any schedule bank (in case guarantee amount is less than 1,00,000/-only).
   a. This guarantee bond shall be in the form of Demand Draft or by means of Bank Guarantee as per proforma attached of the tender document. The Bank Guarantee shall be issued by and Schedule Bank in favour of National Seeds Corporation. The Bank Guarantee should be accompanied by a forwarding letter of the banker on their letter head

ii. The performance guarantee shall be initially valid up to the stipulated date of completion plus 60 days beyond that. In case the time for completion of work gets enlarged, the contractor shall get the validity of performance guarantee extended to cover such enlarged time for completion of work. After recording of the completion of certificate for the work by the competent authority, the performance guarantee shall be returned to the contractor, without any interest.

iii. The Engineer shall not make a claim under the performance guarantee except for amounts to which the Corporation is entitled under the contract (not withstanding and/or without prejudice to any other provisions in the contract agreement) in the event of:
   a. Failure by the contractor to extend the validity of the Performance Guarantee as described herein above, in which event the Engineer may claim the full amount of the performance guarantee.
   b. Failure by the contractor to pay NSC any amount due, either as agreed by the contractor or determined under any of the Clauses/conditions of the agreement, within 30 days of the service of the notice to this effect by Engineer.

iv. In the event of the contract being determined or rescinded under provision of any of the clause/condition of the agreement, the performance guarantee shall stand forfeited in full and shall be absolutely at the disposal of the Chairman-cum-Managing Director.

CLAUSE 1-A RECOVERY OF SECURITY DEPOSIT

The person/persons whose tender(s) may be accepted (hereinafter called 'the Contractor') shall permit National Seeds Corporation (hereinafter called the employer) at the time of making any payment to him for work done under the contract to deduct at the rate of 5 % of the gross amount of each running bill till the sum along with the sum already deposited as earnest money, will amount to security deposit of 5 % of the tendered value of the work subject to maximum of Rs. 5,00,000/- (Rupees five lakhs only).

All compensations or the other sums of money payable by the contractor under the terms of this contract may be deducted from, or paid by the sale of a sufficient part of his security deposit or from the interest arising there from or from any sums which may be due or may become due to the

Signature Not Verified
Subject: CN=ASHWIN D, SERIALNUMBER=2035d4fe20baeb9488f496e7e7fdab3e3fcc14:
6a393f599e6d567e6c881eb03, ST=KARNATAKA, OID.2.5.4.17=560024, OU=
Date: 2021.06.17 10:33:28 IST
User ID : ashwin.d
Serial No : D251AF

contractor or any account whatsoever and in the event of his security deposit being reduced by reason of any such deductions or sale as aforesaid, the contractor shall within 10 days make good in cash or any part thereof the security deposit shall be collected from running bills of the contractor at the rates mentioned above and the Earnest money if deposited in cash at the time of tenders will be treated as part of the Security deposit.

Note – 1

Govt. papers tendered as security will be taken @ 5% (five percent) below its market price or at its face value, whichever is less. The market price of Govt. papers would be ascertained by the Engineer at the time of collection of interest and the amount of interest to the extent of deficiency in value of the Govt. paper, will be with held, if necessary.

Note No.2

Govt. securities will include all form of securities mentioned in Rule No.274 of the G.F. Rules except fidelity bond. This will be subject to the observance of the condition mentioned under the rule against each form of security.

CLAUSE 2 LIQUIDATED DAMAGES FOR DELAY

If the contractor fails to comply with the time for completion in accordance with clause 5 or required progress for the whole of the work or if applicable any section within the relevant time prescribed and clear the site, the contractor shall pay to the employer an amount equal to 10% or such smaller amount, the employer may decide on the amount of estimated cost of the whole work as shown in the tender as compensation as liquidated damage for such default and not as a penalty (which sum shall be the only money due from the contractor for such default) for every day or part of the day which shall elapse between the relevant time for completion and the date stated in completion certificate of the whole of the works or the relevant section, subject to the applicable limit of 10% of the contract price. The employer may, without prejudice to any other method of recovery, deduct the amount of such damages from any money due or to become due to the contractor. The payment of deduction of such damages shall not relieve the contractor from his obligation to complete the works, or from any other of his obligations and liabilities under the contract.

Reduction of liquidated damages shall be considered by the employer if, before the time of completion of the whole of the works, if applicable, any section, a taking over certificate has been issued for any part of the works or of a section, the liquidated damages for delay in completion of the remainder of the works or of that section shall, for any period of delay after the date stated in such taking over certificate, and in the absence of alternative provisions in the contract be reduced in the proportion which the value of the part so certified bears to the value of the whole of the Works or Section, as applicable. The provisions of this Sub-Clause shall only apply to the rate of liquidated damages and shall not affect the limit thereof.

CLAUSE 3.1 SUSPENSION OF WORK

The contractor shall, on the instructions of the engineer suspend the progress of the works or any part thereof for such time and in such manner as the Engineer may consider necessary and shall during such suspension, properly protect and secure the works or such part thereof so far as is necessary in the opinion of the Engineer unless such suspension is;

Digitally signed by
SUBJECT : CN=ASHWIN D, SERIALNUMBER=2b2[illegible]1620ba89488496b7d7fdab3e3fcc14:
6a393f599e6d567e6c881eb03, ST=KARNATAKA, OID.2.5.4.17=560024, OU=
MANAGEMENT, O=NATIONAL SEEDS CORPORATION LTD, C=IN
User ID : ashwin.d
Serial No : D251AF

a) Otherwise provided for in the contract, or
b) Necessary by reason of some default or of breach of contract by the contractor of which he is
responsible, or
c) Necessary by reason of climatic conditions on the site, or
d) Necessary for the proper execution of the works or for the safety of the works or any part thereof (save to the extent that such necessity arises from any act or default by the Engineer or the Employer or from any of the risks defined in the sub clause 3.1) Sub clause-3.2 shall apply.

3.2 DETERMINATION FOLLOWING SUSPENSION

Where pursuant to sub clause 3.1 the sub clause applies, the Engineer shall, after consultation with the Employer determine;

a) Any extension of time to which the contractor is entitled under clause 5, and

b) The amount which shall be added to the contract price, in respect of the cost incurred by the contractor by reason of such suspension and shall notify the contractor with a copy to the Employer.

CLAUSE 4 CONTRACTOR LIABLE TO PAY DAMAGES EVEN IF ACTION NOT TAKEN UNDER CLAUSE - 3

In any case in which any of the powers conferred upon the Engineer by the clause 3 thereof shall have become exercisable and the same shall not be exercised, the non exercise thereof shall not constitute a waiver of any of the conditions hereof and such powers shall not withstanding be exercisable in the event of any future case of default by the contractor and the liability of the contractor for damages shall remain unaffected. In the event of the Engineer putting in force all or any of the powers vested in him under the preceding clause, he may if he so desired after giving a notice in writing to the contractor take possession of (or at the sole discretion of the Engineer which shall be final and binding on the contractor) use on as hire (the amount of the hire money being also in the final determination of the Engineer) all or any tools, plant material and stores in or upon the works, or the site thereof, belonging to the contractor or procured by the contractor and intended to be used for execution of the work or any part thereof, paying or allowing for the same in account at the contract rates or in the case of these not being applicable, at current market rate to be certified by the Engineer whose certificate thereof shall be final and binding on the contractor otherwise the Engineer by notice in writing may order the contractor, foreman or other authorized agent to remove such tools, plant materials or stores from the premises (within the time specified in the notice) and in event the contractor failing to comply with any such requisition, the Engineer may remove them at the contractor's expense or sell them by auction or private sale on account of the contractor and his risk in all respects and the certificate of the Engineer as to the expense of any such removal and amount of the proceed and expense of any such sale shall be final and conclusive against the contractor.

CLAUSE: 5 EXTENSION OF TIME FOR COMPLETION

1. In the event of :
a) The amount or nature of extra or additional work or
b) Exceptionally adverse climatic conditions, or
c) Any delay, impediment or prevention by the Employer, or
d) other special circumstances which may occur, other than through a default or breach of contract by the Contractor or for which he is responsible being such as fairly to entitle the Contractor to an extension of the Time for Completion of the works, or any section or part thereof, the Engineer shall determine the amount of such extension and shall notify the Contractor accordingly, with a

Signature :-
Subject : CN=ASHWIN D, SERIALNUMBER=2035d4fe20bae89488f496e7d7fdab3e36cc14...
MANAGEMENT, GUNATIONAL SEEDS CORPORATION LTD, C=IN
User ID : ashwin.d
Serial No : D251AF

copy to the Employer.

2. Contractor to provide notification and detailed particulars.

Provided that the Engineer is not bound to make any determination unless the Contractor has a) within 28 days after such even has first arisen notified the Engineer with a copy to the Employer, and

b) within 28 days, or such other reasonable time as may be agreed by the Engineer, after such notification submitted to the Engineer detailed particulars of any extension of time to which he may consider himself entitled in order that such submission may be investigated at the time.

CLAUSE: 6 MEASUREMENTS OF WORK DONE

The quantities set out in the Bill of Quantities are the estimated quantities for the works, and they are not to be taken as the actual and correct quantities of the works to be executed by the Contractor in fulfillment of his obligation under the Contract.

The Engineer shall, except as otherwise stated ascertain and determine, by measurement the value of the works in accordance with Clause 7. The Engineer shall, when he requires any part of the works to be measured, give reasonable notice to the Contractor's authorized agent, who shall:

a) forthwith attend or send a qualified representative to assist the Engineer in making such measurement and

b) supply all particulars required by the Engineer.

Should the Contractor not attend, or neglect or omit to send such representative, then the measurement made by the Engineer or approved by him shall be taken to be the correct measurement of such part of the works. For the purpose of measuring such permanent works as are to be measured by records and drawings, the Engineer shall prepare records and drawings as the work proceeds and the Contractor, as and when called upon to do so in writing, shall, within 14 days, attend to examine and agree such records and drawing with the Engineer and shall sign the same when so agreed. If the contractor does not attend to examine and agree such records and drawing, they shall be taken to be correct. If, after examination of such records and drawing, the contractor does not agree the same or does not sign the same as agreed, they shall nevertheless be taken to be correct, unless the Contractor within 14 days of such examination, lodges with the Engineer notice of the respect in which such records and drawing are claimed by him to be incorrect. On receipt of such notice, the Engineer shall review the records and drawings and either confirm or vary them.

The works shall be measured net, notwithstanding any general or local custom, except where otherwise provided for the Contract.

CLAUSE: 7 PAYMENT ON INTERMEDIATE CERTIFICATE TO BE REGARDED AS ADVANCE

No payment shall be made for a work estimated to cost rupees fifty thousand or less till after the whole of the work shall have been completed and certificate of completion given. But in the case of a work estimated to cost more than Rs. fifty thousand and the contractor shall, on submitting the bill be entitled to receive a monthly payment as interim or running account bill then executed to the satisfaction of the Engineer, on the basis of recorded measurements in triplicate on or before every month on date fixed by the Engineer. But all such intermediate payments shall be regarded as payments by way of advance against the final payment only and not as payment for work actually done and completed, and shall not preclude the requiring of bad, unsound imperfect or unskilled work to be removed and taken away and reconstructed or re-erected or be considered as an admission

Digitally signed by
DN: C=IN, O=C-DAC, OU=NIC-CA 2011, SERIALNUMBER=285704fe2d8a6e74d8f4e67d74ab3e5fc4
6a393f599e6d567e6c881eb03, ST=KARNATAKA, OID.2.5.4.17=560024, OU=
WOMAGEMENT, O=NATIONAL INFORMATICS CORPORATION LTD., C=IN
Date: 2015.07.31 15:
Serial No : D251AF

of the due performance of the contract or any part thereof in any respect or the accruing of any claim nor shall its conclude, determine or effect in any way the powers of the Engineer, Under these conditions or any of them as to the final settlement and adjustment of the accounts or otherwise or in any other way vary or effect the contract.

Whenever there is likely to be delay in recording detailed measurements for making running payment in the case of residential buildings, advance payments without detailed measurements for work done (other then foundation and finishing items) up to (a) lintel level (including sun shades etc.) and (b) slab level, for each floor worked out at 75% of the tendered rates may be made in running account bills by the Engineer at his discretion on the basis that the work has been completed up to the level in question.

The advance payments so allowed shall be adjusted in the subsequent running bill by taking detailed measurements thereof. Final payment shall be made only on the running basis of detailed measurements.

CLAUSE: 8.1 COMPLETION CERTIFICATE AND COMPLETION PLAN

Within ten days of the completion of the work, the contractor shall give notice of such completion to the Engineer and within thirty days of the receipt of such notice the Engineer shall inspect the work and if there is no defect in the work shall furnish the
contractor with a certificate of physical completion otherwise a provisional certificate of completion indicating defects (a) to be rectified by the contractor and/or (b) for which payment will be made at reduced rates, shall be issued but no certificate of completion, provisional or otherwise shall be issued, nor shall the work be considered to be complete until the contractor shall have removed from the premises on which the work shall be executed all scaffolding, surplus materials, rubbish and all huts and sanitary arrangement required for his/their work people on the site in connection with the execution of the
work as shall have been erected or constructed by the contractor(s) and cleaned of the dirt from all wood work, doors, windows, walls, floors or other part of any building, in upon or about which the work is to be executed or of he may have had possession for the purpose of the execution thereof and not until the work shall have been measured by the Engineer/. If the contractor shall fail to comply with the requirements of this clause as to removal of scaffolding, surplus materials, rubbish, all huts and sanitary arrangements as aforesaid and cleaning off dirt on or before the date fixed for the completion of work the Engineer may at the expense of the contractor remove such scaffolding, surplus materials and rubbish etc. and dispose off the same as he thinks fit and clean of such dirt as aforesaid, and the contractor shall have no claim in respect of any such scaffolding or surplus materials as aforesaid except for any sum actually realized by the sale thereof.

8.2 CONTRACTOR TO KEEP SITE CLEAN

The splashes and droppings from white washing, colour washing, painting etc. on walls, floors, doors, windows, etc. shall be removed and the surface cleaned simultaneously with the completion of these items of work in the individual rooms, quarters or premises etc. where the work is done without waiting for the actual completion of all the other items of work in the contract. In case the contractor fails to comply with the requirements of this clause, Engineer shall have the right to get this work done at the cost of the contractor either departmentally or through another agency. Before taking such action, the Engineer shall give two days notice in writing to the contractor.

8.3 COMPLETION PLANS TO BE SUBMITTED BY CONTRACTOR

The contractor on completion of the work shall submit to the employer's three bound sets of all "As constructed" drawing for every component of the work at his own cost and plan as required vide General specifications for Electrical Works (Part-I Internal) 1972 & (Part-II External) 1974 as applicable within thirty days of the completion of the work.

In case the contractor fails to submit the completion plan as aforesaid he shall be liable to

Subject : CN=ASHWIN D, SERIALNUMBER=2d5fd4fe2b0ae3948bf49de7d7fdab3e3fcc14c6a393f599e6d567e6c881eb03, ST=KARNATAKA, OID.2.5.4.17=560024, OU=MANAGER, O=CONSTRUCTION CORPORATION LTD, C=IN
Issuer : CN=ashwin d
Serial No : D251AF

pay a sum equivalent to 2.5% of the value of the work subject to a ceiling of Rs.15,000/- (Rupees fifteen thousand only) as may be fixed by the Engineer shall be final and binding on the contractor.

PAYMENT OF BILLS

CLAUSE: 9

9.1 RUNNING BILLS

A bill shall be submitted by the contractor each month on or before the date fixed by the Engineer for all works executed in the previous months and the Engineer shall take or cause to be taken the requisite measurement for the purpose of having the same verified and the claim as far as admissible, adjusted as far as possible, before the expiry of ten days from the presentation of the bill. If the contractor does not submit the bill within the time fixed as aforesaid the Engineer may depute within seven days of the date fixed as aforesaid, a subordinate to measure up the said work in the presence of the contractor whose countersignature to the measurement list will be sufficient warrant and the Engineer may prepare a bill from such list. Engineer's consent for release of running bill shall be linked with the satisfactory progress of the work.

9.2 FINAL BILL

The final bill shall be submitted by the contractor in the same manner as specified in running bills within one month from the date of the final certificate of completion furnished by the Engineer. No further claims shall be made by the contractor after submission of the final bill and these shall be deemed to have been waived and extinguished. Payments off those items of the bill in respect of which there is no dispute and of items in dispute, for quantities and rates as approved by Engineer, will, as far as possible be made within the period specified herein under, the period being reckoned from the date of receipt of the bill by the Engineer or his authorized Officer, complete with account of materials, issued by the Corporation and dismantled materials.

i) If the Tendered value of work is up to Rs. 5 lakhs : 3 months
ii) If the Tendered value of work exceeds Rs. 5 lakhs : 6 months

CLAUSE: 10.1 MATERIAL SUPPLIED BY EMPLOYER

Material which Employer will supply are shown in schedule 'B'. The same will be supplied by the employer for the purpose of the contract only and for that contractor shall give his requirement on the basis of drawings or schedule of quantities of the work in writing at least 7 days in advance, which shall be issued to him keeping in view progress of work. For storage of such issued material, the contractor will make his own arrangement of storage space at site under double lock locking arrangement operable jointly by the engineer and the contractor. Contractor shall be responsible to take delivery of the material from local supply place of employer as per direction of Engineer and no extra payment will be admissible for this. The value of the full quantity of material so supplied at the rates specified in the said schedule of materials shall be set off or deducted from any sum due or thereafter to become due to the contractor under the contract or otherwise against or from the security deposit. At the time of submission of bills the contractor shall supply statement of material issued, material consumed and the material balance at site in original good condition.

Notwithstanding anything to the contrary contained in any other clause of contract, all stores/materials so supplied to the contractor shall remain the absolute property of Employer and the contractor shall be trustee of the stores/material so supplied/procured and the said stores/materials shall not be removed/disposed off from the site of the work on any Account and shall be at all times

Signature :
Subject : CN=ASHWIN D, SERIALNUMBER=2a35d4fe20bae89488f496e7d7fdab3e3fcc14
MANAGEMENT, O=NATIONAL SEEDS CORPORATION LTD., C=IN
User ID : ashwin.d
Serial No : D251AF

open to inspection by Engineer. Any such stores/materials remaining unused shall be returned to the Engineer at a place, directed by him. But in case it is decided no to take back the stores/materials the contractor shall have no claim for compensation on any account of such stores/materials so supplied to him as aforesaid and not used by him or for any wastage in or damage to him on such stores/materials.

On being required to return the stores/materials, the contractor shall hand over the stores/materials, on being paid or credited such price as the Engineer shall determine, having due regard to the condition of the stores/materials. The price allowed for credit to the contractor, however, shall be at the prevailing market rate not exceeding the amount charged to him excluding the storage charge, if any. The decision of the Engineer shall be final and conclusive. In the event of breach of the aforesaid condition, the contractor shall in addition to throwing himself open to account of contravention of the terms of the licenses or permit and/or fro criminal breach of trust, be liable to Government for all advantages or profits resulting or which in the usual course would have resulted to him by reason of such breach. Provided that the contractor shall in no case be entitled to any compensation or damages on account of any delay in supply of non supply thereof at all or any such materials and stores provided further that the contractor shall be in no case entitled to supply thereof at all or any such materials and stores provided further that the contractor shall be bound to execute the entire work.

10.2 MATERIALS TO BE PROVIDED BY THE CONTRACTOR

The contractor shall at his own expense provide all materials, required for the works other than those which are stipulated to be supplied by the employer.

The contractor shall, at his own expense and without delay; supply to the engineer samples of materials to be used on the work and shall get these approved in advance. All such materials to be provided by the contractor shall be in conformity with the specifications laid down or referred in the contract. The contractor shall, if requested by the Engineer furnish proof, to the satisfaction of the Engineer that the materials so comply.

The Engineer shall have full powers to require the removal from the premises of all materials which in his opinion are not in accordance with the specifications and in case of default the Engineer shall be at liberty to employ other persons to remove the same without being answerable or accountable or any loss or damage that may happen or arise to such materials. The Engineer shall also have full powers to require other proper materials to be substituted thereof and in case of default the Engineer may cause the same to be supplied and all costs which may be involved due to such removal and substitution are to be borne by the contractor.

10.3 SECURED ADVANCE ON NON - PERISHABLE MATERIALS

The contractor on signing an indenture in the form to be specified by the Engineer shall be entitled to be paid during the progress of the execution of the work up to 75% of the value of materials which are in the opinion of the Engineer non-perishable and or in accordance with the contract and which have been brought on the site in connection therewith and are adequately stored and/or protected against damage by weather or other causes but which have at the time of advance been incorporated in the works. When materials on account of which an advance has been made under this sub-clauses are incorporated in the work the amount of such advance shall be deducted from the next payment made under any of the clause or clauses of this contractor.

10.4 PAYMENT ON ACCOUNT OF INCREASE AND DECREASE IN PRICES/WAGES DUE TO STATUTORY ORDERS.

Signature Not Verified
Digitally signed by ASHWIN SERIALNUMBER=1083ea20ba69188f9e670fa1e3e0f...
MANAGEMENT, O=NATIONAL SEEDS CORPORATION LTD, C=IN
User ID : ashwin.d
Serial No : D251AF

If during the progress of works the price of any material incorporated in the works (not being a materials supplied by the Employer in accordance with clause 10 hereof) and or wages of labour increases/decreases as a result of any fresh law or statutory rule or order coming into force (but not due to any changes in Sales tax) and such increase/decrease exceeds ten percent of the price and/or wages prevailing at the time of receipt of the tender for the work and the contractor thereupon necessarily and properly pays in respect of that material (incorporated in the works) such increased/decreased price and/or in respect of labour engaged on the execution of the work such increased/decreased wages, then the amount of the contract shall accordingly be varied provided always that any increase so payable is not in the opinion of the Engineer (whose decision shall be final and binding) attributable to delay in the execution of the contract within the control of the contractor.

Provided however, no reimbursement shall be made if the increase is not more than 10% of the said prices/wages and if so the reimbursement shall be made only on the excess over 10% and provided further that any such increase shall not be payable if such increase has become operative after the contract or extended date of completion of the work in question. In the same way any decrease in the prices of material/wages of labour coming into force in excess of 10%, downward adjustment would be made and recovery would be affected by the Engineer accordingly.

The contractor shall for the purpose of this condition keep such books of account and other documents as are necessary to show the amount of any increase claimed or reduction available and shall allow inspection of the same by a authorized representative of the Employer and further shall at the request of the Engineer furnish any documents so kept and such other information as the Engineer may require.

The contractor shall within a reasonable time of his becoming aware of any alteration in the price of any such material and or wages of labor give notice thereof to the Engineer stating that the same is given pursuant to this condition together with an information relating thereto which he may be in a position to supply.

10.5 PAYMENT DUE TO INCREASE/DECREASE IN PRICES/WAGES AFTER RECEIPT OF TENDER FOR WORKS FOR 18 MONTHS

If the prices of material (not being the material supplied by the Employer in accordance with Clause 10) and/or wages of labour required for execution of the work increase, the contractor shall be compensated for such increase as per provisions detailed below and the amount of the contract shall accordingly be varied, subject to the condition that such compensation for escalation in prices shall be available only for work done during the stipulated period of the contract including such period for which the contract is validity extended under the provisions of Clause 5 of the contract without any action under clause 2 and also subject to the condition that no such compensation shall be payable for a work for which the stipulated period of completion is 6 months or less. Such compensation for escalation in the prices of materials and labour when due, shall be worked out based on the following provisions:

1. The base date for working out such escalation shall be the last date on which tenders were received.

2. The cost of work on which escalation will be payable shall be reckoned as 85% of the cost of work as per the bills, running or final excluding any work for which payment is made at prevailing market rates. From this amount the value of material supplied by the Employer under clause 10 and proposed to be recovered shall be deducted before the amount of compensation for escalation is worked out. In the case of materials brought to site for which any secured advance is included in the bill the full value of such materials as assessed by the Engineer (and not the reduced amount for which secured advance has been paid) shall be added to the cost of work shown in the bill for operation of this clause. Similarly, when such materials are incorporated in the work and the secured

Signature :-
Subject : CN=ASHWIN D, SERIAL NUMBER=2035d4fe20bae89488f49667d7fdab3e3fcc14
MANAGEMENT, O=NATIONAL SEEDS CORPORATION LTD, C=IN
User ID : ashwin.d
Serial No : D251AF

advance is deducted from the bill, the full assessed value of the materials originally considered for operation of this clause should be deducted from the cost of the work shown in the bill, running or final.

3. The components of materials, labour P.O.L etc. shall be predetermined for every work and incorporated in the conditions of contract attached to the Tender papers and the decision of the Engineer in working out such percentage shall be binding on the contractor.

4. The compensation for escalation for materials and P.O.L shall be worked out as per formula given below:

(i) $Vm = W \times \frac{X}{100} \times \left(\frac{MI}{MIo} - 1 \right)$

Vm = Variation in material cost i.e increase or decrease in the amount in Rupees to be paid or recovered.

W = Cost of work done worked out as indicated in sub para 2 above.

X = Component of materials expressed as percent of the total value of work.

MI & MIo = All India whole sale index for all commodities for the period under reckoning as published by the Economic Advisor to Govt. of India, Ministry of Industry & Commerce, for the period under consideration and the valid at the time of receipt of tenders, respectively.

(ii) $Vf = W \times \frac{Z}{100} \times \left(\frac{FI}{FIo} - 1 \right)$

Vf = Variation in cost of fuel, oil and lubricant, increase or decrease in rupees to be paid or recovered.

W = Value of work done, worked out indicated in sub para 2 above.

Z = Component of P.O.L expressed as a percent of total value of work as indicated under the special conditions of contract.

FI & FIo = Average index number of wholesale price for group (fuel, power light and lubricants) as published weekly by the Economic Adviser to Govt.of India Ministry of Industry for the period under reckoning and that valid at the time of receipt of tenders respectively.

5. The following principles shall be followed while working out indices mentioned in sub-para 4 above.

a) The compensation for escalation shall be worked out at quarterly intervals and shall be with respect to the cost of work done as per bills paid during the three calendar months of said quarter. The first such payment shall be made at the end of three months after the month (excluding) in which the tender was accepted and thereafter at three months interval. At the time of completion of the work, the last period for payment might become less than three month, depending on the actual date of completion.

The index (MI/FI etc.) relevant to any quarter/period for which such compensation is paid shall be the arithmetical average of the indices relevant to the three calendar months. If the period up to date of completion after the quarter covered by the last such installment of payment, is less than three months, the index MI and FI shall be the average of the indices for the moths falling within that period.

6. The compensation for escalation for labour shall be work out as per the formula given below:

Signature :-
Subject : CN=ASHWIN.D, SERIALNUMBER=2035d4fe20bae89488f496e7d7fdab3e3fcc14:
User ID : ashwin.d
Serial No : D251AF

$$Vl = W \times \frac{Y}{100} \times \frac{(LI - LIo)}{LIo}$$

Vl = Variation in labour cost i.e increase or decrease in the amount in rupees to be paid or recovered.

W = Value of work done, worked out as indicated in sub para 2 above.

Y = Component of labour expressed as percent of the total value of work.

LI & LIo = Minimum daily wage in rupees of an unskilled adult male mazdoor fixed under any lawa, statutory rule or order as on the last date of receipt of tender and the quarter previous to the one under consideration respectively.

7. The following principles will be followed while working out the compensation as per sub para 6 above:

a) The minimum wage of an unskilled male mazdoor mentioned in sub para 6 above shall be the higher of the wage notified by the Govt. of India, Ministry of Labour and that notified by the local administration both relevant to the place of work and the period of reckoning.

b) The escalation for labour shall also be paid at the same quarterly intervals when escalation due to increase in cost of materials and / or P.O.L is paid under this clause. If such revision of minimum wages takes place during any such quarterly intervals, the escalation compensation shall be payable at revised intervals, the escalation compensation shall be payable at revised rates only for work done in subsequent quarters.

8. In the event the price of material and/or wages of labour required for execution of the work decreases, there shall be downward adjustment of the cost of the work so that such price of materials and/or wages of labour shall be deductible from the cost of work under this contract and in this regard the formula herein before stated under this clause 10.5 shall mutatis mutandis apply, provided that

(i) No such adjustment for the decrease in the price of materials and/or wages of labour aforementioned would be made in case of contracts in which the stipulated period of completion of the work is six months or less.

(ii) The Engineer shall otherwise be entitled to lay down the procedure by which the provision of this sub clause shall be implemented from time to time and the decision of the Engineer on this behalf shall be final and binding on the contractor.

9. Provided always that the provisions of the proceeding clause 10.4 shall not be applicable for contracts where provisions of this clause 10.5 are applicable. But in cases where provisions of this clause are not applicable then provisions in clause 10.4 will become applicable.

10.6 DISMANTLED MATERIAL EMPLOYER'S PROPERTY

The contractor shall treat all materials obtained during dismantling of a structure, excavation of the site for a work etc. as Employer's property and such materials shall be disposed off to the best advantage of the Employer.

CLAUSE: 11 WORK TO BE EXECUTED ACCORDING TO SPECIFICATION DRAWINGS, ORDERS ETC.

The contractor shall execute the whole and every part of the work in the most substantial and workman like manner and both as regard materials and otherwise in every respect in strict accordance with the specifications. The contractor shall also confirm exactly fully and faithfully to

Signature Not Verified
Subject : CN=ASHWIN D, SERIALNUMBER=2035d4fe20bae89488f496e7d7fdab3e3fcc14:
User ID : ashwin.d
Serial No : D251AF

the designs, drawings and instructions in writing in respect of the work signed by the Engineer and the contractor shall be furnished free of charge one copy of the such specifications, and of all such designs, drawings and instruction as are not included in the standard specification.

The contractor shall comply with the provisions of the contract and with the care and diligence execute and maintain the works and provide all labour and materials, tools and plants including for measurements and supervision of all works, structural plans and other thinks of temporary or permanent nature required for such execution and maintenance in so far as the necessity for providing these, is specified or is reasonably responsibility for adequacy, suitability and safety of all the works and methods of construction.

CLAUSE: 12 VALUATION OF DEVIATIONS/VARIATIONS

The Engineer shall have power (1) to make any alternations in omissions from, additions to or substitutions for the original specifications, drawings, designs and instructions, that may appear to him to be necessary during the progress of the work, and (2) to omit a part of the work in case of non availability of a portion of the site or for any other reasons and the contractor shall be bound to carry out the work in accordance with any instructions given to him in writing by the Engineer and such alterations omission, additions or substitutions shall form part of the contract as if originally provided therein and any altered, additional or substituted work which the contractor may be directed to do in the manner above specified as part of the work, shall be carried out the contractor on the same conditions in all respect including price on which he agreed to do the main work. The time for the completion of the work shall in the proportion that the altered, additional or substituted work bears to the original contract work on the request of the contractor and the decision of the Engineer shall be conclusive.

12.1 The rate for additional altered or substituted work referred to in clauses shall be worked out in accordance with the following provisions in their respective order:-

i) If the rates for the additional, altered or substituted item of work is specified in the contract for the work, the contractor is bound to carry out additional, altered or substituted work at same rate as are specified in the contract for the work.

ii) If the rates for the additional or substituted work includes any work for which no rate is specified in the contract for work and cannot be derived from similar class of work in the contract, then such work shall be carried out as the rates appearing in CPWD Schedule of Rates 2014 for location of work or state PWD rates whichever is less in order of preference with correction slips min us/plus percentage which the total tendered amount compares to the estimated cost of the entire work put to tender.

iv) If the rates for the altered, additional or substituted work cannot be determined in the manner specified in sub clause (i) to (iii) above, then the rates for such part/parts will be determined by the Engineer on the basis of the prevailing market rates when the work was done.

12.2

The Contractor shall send to the Engineer once every three months an up to date account giving complete details of all claims for additional payments to which the contractor may consider himself entitled and of all additional work ordered by the Engineer which he has executed during the preceding quarter failing which the contractor shall be deemed to have waived his right. However, the Employer may authorize consideration of such claims on merits.

12.3

Any operation incidental to or necessarily has to be in contemplation of tendered while filing tender, or necessary for proper execution of the item included in the Schedule of quantities or in the

Digitally signed by ASHWIN D
Subject: CN=ASHWIN D, SERIALNUMBER=2d35d4f620bae8948bf496e7d7f0ab3e3fc114:
6a393f599e6d5674c881eb03, ST=KARNATAKA, OID.2.5.4.17=560024, OU=
Date: 2019.07.10 10:40:08 IST
User ID : ashwin.d
Serial No : D251AF

schedule of rates mentioned above, whether or not, specifically indicated in the description of the item and the relevant specifications, shall be deemed to be included in the rates quoted by the tenderer or the rate given in the said schedule of rates, as the case may be. Nothing extra shall be admissible for such operations.

CLAUSE : 13 FOR CLOSURE OF CONTRACT DUE TO ABANDONMENT OR REDUCTION IN SCOPE OF WORK

If at any time after the commencement of the work the Employer shall for any reasons decide to abandon or reduce the scope of the works and hence not required the whole or part of works to be carried out the Engineer shall give notice in writing to that effect to the contractor and the contractor shall act accordingly in the matter. The contractor shall have no claim to any payment of compensation whatsoever on account of any profit or advantage which he might have derived from the execution of the work in full but which he did not derive in consequence of the foreclosure of whole or part of the work.

The contractor shall be paid at contract rates full amount for the works executed at site and in addition, a reasonable amount on account of the items as mentioned here under,

i) the contractor shall be paid the charges on the cartage only of materials actually and bona fide brought to the site of the work by the contractor and rendered surplus as a result of the abandonment curtailment of the work or any portion thereof and then taken back by the contractor, provided however, that the Engineer shall have in all such cases the option of taking over all or any such materials at their purchase price or at local current rates whichever may be less.

"In the case of such stores having been issued by the Employer and returned by the contractor to the Employer, credit shall be given to him by the Engineer at rates not exceeding those at which they were originally issued to him after taking into consideration and deduction for claims on account of any deterioration or damage while in the custody of the contractor and in this respect the decision of the Engineer shall be final and binding.

CLAUSE: 14.1 CANCELLATION OF CONTRACT IN FULL OR PART

If contractor:

i) at any time makes default in proceeding with the work or any part of the work with the due diligence and continuous to do so after a notice in writing of 7 days from the Engineer.

ii) commits default to complying with any of the terms & conditions of the contract and does not remedy, it or take effective steps to remedy it within 7 days after a notice in writing is given to him in that behalf by the Engineer.

iii) fails to complete the works or items of work with individual dates of completion, on or before the date(s) of completion, and does not complete them within the period specified in a notice given in writing in that behalf by the Engineer, or

iv) shall enter into a contract with NSC in connecting with which commission has been paid or agreed to be paid by him or to hi knowledge, unless the particulars of any such commission and the terms of payment thereof have been previously disclosed in writing to the Accepting Authority/Engineer, or

SUBJECT: CN=ASHWIN D, SERIALNUMBER=2d35d4fe20bae89488f496e7d7fdab3e3fcc14:
6a393f599e6d567e6c881eb03, ST=KARNATAKA, OID.2.5.4.17=560024, OU=
MANAGEMENT, O=NATIONAL SEEDS CORPORATION LTD, C=IN
User ID : ashwin.d
Serial No : D251AF

v) shall obtain a contract with NSC as a result of wrong tendering or other non - bonafide methods of competitive tendering; or

vi) being an individual, or if a firm, any partner thereof shall at any time be adjudged insolvent or have a receiving order or order for administration of his estate made against him or shall take any proceedings for liquidation or

composition (other than a voluntary liquidation for the purpose of amalgamation or reconstruction) under any Insolvency Act for the time being in force or make any conveyance or assignment of his effects or composition or arrangement for the benefit of his creditors or purport so to do, or if any application be made under any Insolvency Act for the time being in force for the sequestration of his estate or if a trust deed be executed by him for benefit of his creditors.

On cancellation of the contract in full or in part, the Engineer shall determine what amount, if any, is recoverable from the contractor for completion of the works or part of the works or in case the works or part of the works is not to be completed, the loss or damage suffered by Employer.
Any excess expenditure incurred to be incurred by Employer in completing the works or part of the works or the excess loss or damages suffered or may be suffered by Employer as aforesaid after allowing such credit shall without prejudice to any other right or remedy available to Employer in law be recovered from any moneys due to the contractor on any account, and if such moneys are not sufficient the contractor shall be called upon in writing and shall be liable to pay the same within 30 days.

If the contractor shall fail to pay the required sum within the aforesaid period of 30 days, the Engineer shall have the right to sell any or all of the contractors unused materials, constructional plant, implements, temporary buildings etc.

14.2 WHEN CONTRACT CAN BE TERMINATED

Subject to other provisions contained in this clause the Engineer may, without prejudice to his any other rights or remedy against the contractor in respect of any delay, inferior workmanship, any claims for damages and/or any other provisions of this contract or otherwise, and whether the date of completion has or has not elapsed, by notice in writing absolutely terminate the contract in any of the following cases.

i) If the contractor having been given by the Engineer a notice in writing to rectify, reconstruct or replace any defective work or that the work is being performed in an inefficient or otherwise improper or unworkman like manner shall omit to comply with the requirement of such notice for a period of seven days thereafter.

ii) If the contractor has, without reasonable cause, suspended the progress of the work or has failed to proceed with the work with due diligence so that in the opinion of the Engineer (which shall be final and binding) he will be unable to secure completion of the work by the date for completion and continues to do so after a notice in writing of seven days from the Engineer.

iii) If the contractor persistently neglects to carry out his obligations under the contract and/or commits default in complying with any of the terms in conditions of the contract and does not remedy it or take effective steps to remedy it within 7 days after a notice in writing is given to him in that behalf by the Engineer.

Signature :-
Subject : CN=ASHWIN D, SERIALNUMBER=2035d4fe20bae89488f496e7d7fdab3e3fcc14
6a393f599e6d567e6c881eb03, ST=KARNATAKA, OID.2.5.4.17=560024, OU=
Date : 2019.07.31 10:00:00 +05'30'
User ID : ashwind
Serial No : D251AF

iv) If the contractor commits any acts mentioned in Clause 21 hereof, when the contractor has

made himself liable for action under any of the cases aforesaid the engineer on behalf of employer shall have powers.

v) To determine or rescind the contract as aforesaid (of which termination or rescission notice in writing to the contractor under the hand of the Engineer shall be conclusive evidence) Upon such determination or rescission the full security deposit recoverable under the contract shall be liable to be forfeited and shall be absolutely at the disposal of the NSC if any portion of the Security Deposit has not been paid or received it would be called for an forfeited.

vi) After giving notice to the contractor to measure up the work of the contractor and to take such whole, or the balance or part thereof as shall be un-executed of his hands and to give it to another contractor to complete in which case any expenses which may be incurred in excess of the sum which would have been paid to the original contractor if the whole work has been executed by him (of the amount of which excess the certificate in writing of the Engineer shall be final and conclusive) shall be borne and paid by the original contractor and may be deducted from any money due to him by NSC under his contract or on any other account whatsoever or from his security deposit or the proceeds of sales thereof or a sufficient part thereof as the case may be. If the expenses incurred by the Department are less than the amount payable to the contractor at his agreement rate, the difference shall not be paid to the contractor.

CLAUSE: 15 MEASUREMENTS OF WORK BEYOND REACH

If the contractor shall give, not less than seven days notice in writing to the Engineer or his representative, before covering up or otherwise placing beyond the reach of measurements, any work in order that the same may be measured and correct dimensions thereof be taken before the same is so covered up or placed beyond the reach of measurement and shall not cover up any work without the consent in writing of the Engineer or his Representative shall within the aforesaid period of seven days inspect the work, and if any work shall be covered up or placed beyond the reach of measurement without such notice having been given or the Engineer consent being obtained the same shall be uncovered at the contractors expense, or in default thereof no payment or allowance shall be made for such work or the materials with which the same was executed.

CLAUSE: 16 ACTION IN CASE WORK NOT DONE AS PER SPECIFICATION

All work under or in course of execution or executed in pursuance of the contract shall at all times be open to the inspection and supervision of the Engineer and his authorized representative and other superior officers related to Quality Control and of Chief Technical Examiner's office and the contractor shall at all times during the usual working hours and at all other times at which reasonable notice of the visit of such officers have been given to the contractor, either himself be present to receive orders and instructions, or have a responsible agent duly accredited in writing, present for that purpose. Orders given to the contractor's agent shall be considered to have the same force as if they had been given to the contractor himself.

If it shall appear to the Engineer or his authorized representative at work or to the Chief Technical Examiner or his subordinate Officers, that any work has been executed with unsound, imperfect, or unskillful workmanship, or with materials or articles provided by him for the execution of the work which are unsound or of a quality inferior to that contracted or otherwise not in accordance with the contract the contractor shall, on demand in writing which shall be made within six months of the completion of the work from the Engineer specifying the work, materials or articles complained of notwithstanding that the same may have been passed, certified and paid for forthwith rectify, or remove and reconstruct the work so specified in whole or in part, as the case may require or as the case may be, remove the materials or articles so specified and provide other proper and suitable materials or articles at his own charges and cost. In the event of the failing to do so within a period specified by the Engineer in his demand aforesaid, then the contractor shall be liable to pay compensation at the same rate as under Clause 2 of the contract (for non-completion of the work in time) for this default.

Subject : CN=ASHWIN D, SERIALNUMBER=2035d4fb20bbe8548f496e7d7ddb3e3fcc14:
6a393f599e6d567e6c881eb03, ST=KARNATAKA, OID.2.5.4.17=560024, OU=
Serial No : D251AF

In such case the Engineer may not accept the item of work at the rates applicable the item of work at the rates applicable under the contract but may accept such items at reduced rates as the competent authority may consider reasonable during the preparation of on account bills or final bill if the item is so acceptable without detriment to the safety ad utility of the item and the structure or he may reject the work outright without any payment and/or get it and other connected and incidental items rectified, or removed and re-executed at the risk and cost of the contractor. Decision of the Engineer to be conveyed in writing in respect of the same will be final and binding on the contractor.

CLAUSE: 17 CONTRACTOR LIABLE FOR DAMAGES, DEFECTS DURING MAIN TENANCE PERIOD

If the contractor or his working people or servants shall break, deface, injure or destroy and part of building, in which they may be working, or any building, main or ancillary or other installation fixture etc. or any part of it is being executed or if any damage shall happen to the work while in progress, from any cause whatsoever or if any defect, shrinkage or other faults appear in the work within twelve months after a certificate final or otherwise of its completion shall have been given by the Engineer as aforesaid arising out of defective or improper materials or workmanship, the contractor shall upon a receipt of a notice in writing on that behalf make the same good at his own expense, or in default the Engineer may cause the same to be made good by other workman and deduct the expense from any sums that may be due or at any time thereafter may become due to the contractor or from his security deposit, or the proceeds of sale thereof or of a sufficient portion there of from the security deposit of the contractor.

CLAUSE: 18 CONTRACTOR TO SUPPLY TOOLS & PLANTS ETC.

The contractor shall provide at his own cost all materials (except such special materials if any, as may in accordance with the contract be supplied by Employer plant tools, appliances, implements, ladders, cordage, tackle, scaffolding and temporary works required for the proper execution of the work. Whether original, altered or substituted and whether included in the specification or other documents forming part of the contract or referred to in these conditions or not, or which may be necessary for the purpose of satisfying or complying with the requirements of Engineer as to any matter as to which under these conditions he is entitled to be satisfied, or which he is entitled to require together with carriage therefore to and from the work. The contractor, shall also supply without charge the requisite number of persons with the means and materials, necessary for the purpose of setting out works, and counting, weighing and assisting in the measurement for examination at any time and from time to time of the work or materials. Failing his so doing the same may be provided by the Engineer at the expense of the contractor and the expense may be deducted, from any money due to the contractor, under the contract and/or from his security deposit thereof.

CLAUSE: 18.1 RECOVERY OF COMPENSATION PAID TO WORKMAN

In every case in which by virtue of the provisions of sub-section (i)_ of section 12 of the Workmen's Compensation Act, 1923, Government is obliged to pay compensation to a workman employed by the contractor the amount of the compensation so paid; and without prejudice to the rights of the Employer under Section 12, sub-section (ii) of the said Act. Employer shall be at liberty to recover such amount or any part thereof by deducting it from the security deposit or
from any sum due by Employer to the contractor whether under this contract or otherwise. Employer shall not be bound to contest any claim made against it under Section 12, sub-section (i) of the Said Act, except on the written request of the contractor and upon his giving to Employer full security for all costs for which Employer might become liable in consequence such claim.

Signature :-
Subject : CN=ASHWIN D, SERIALNUMBER=2035d4fe20bae89488f496e7d7fdab3e3fcc14:
6a393f599e6d567e6c881eb03, ST=KARNATAKA, OID.2.5.4.17=560024, OU=
MANAGEMENT, O=NATIONAL SEEDS CORPORATION LTD, C=IN
User ID : ashwin.d
Serial No : D251AF

CLAUSE: 18.2 ENSURING PAYMENT AND AMENITIES TO WORKERS IF CONTRACTOR FAILS

In every case in which by virtue of the provisions of the contract labour (Regulation and Abolition) Act 1970 and of the contract labour (Regulation and Abolition Central Rules 1971) Employer is obliged to pay any amounts of wages to a Workman employed by the contractor in execution of the works or to incur any expenditure providing welfare and health amenities required to be provided under the above said Act and the Rules under Clause 19 and sanitary arrangements for workers employed by Contractors. NSC will recover from the contractor the amount of wages so paid or the amount of expenditure so incurred; and without prejudice to the right of the Employer under, Section 20 Sub section (2) and Section 21 sub-section (4) of the contractor Labour (Regulation & Abolition Act 1970). Employer shall be at liberty to recover such amount or any part thereof by deducting it from the security deposit or from any sum due to the contractor whether under this agreement or otherwise. Employer shall not be bound to contest any claim made against section 20 sub section (1) & Section 21, sub-section (4) of the said Act, except on the written request of the contractor and upon his giving to the Employer full security for all costs for which Employer might become liable in contesting such claim.

CLAUSE: 19 ENGAGEMENT OF STAFF AND LABOUR

The contractor shall, unless otherwise provided in the contract, make his own arrangements for the engagement of all staff and labour, local or other, and for their payment housing, feeding and transport.

a) The Contractor shall, at all times during the continuity of the contract, comply fully with all existing Acts, regulations and by laws including all statutory amendments and re-enactment of Stare or Central Government and other local authorities and any other enactments, notifications and acts that may be passed in future either by the State or the Central Government or local authority, including Indian Workmen's Compensation Act, Contract Labour (Regulation and Abolition) Act 1970 and Equal Remuneration Act 1976. Factories Act, Minimum Wages Act, Provident Fund Regulations, Employees Provident Fund Act, schemes made under the same Act and also labour Regulations made by Government from time to time. Health and Sanitary Arrangement for Workmen, Insurance and other benefits and shall keep Employer indemnified in case any action is commenced by competent authorities for contravention by the Contractor. If the Employer is cause to pay or reimburse, such amounts as may be necessary to cause or observe, or for non observance of the provisions stipulated here forth on the part of the Contractor, the Engineer shall have the right to deduct from nay moneys due to the Contractor, his amount of Performance Security or recover from the Contractor personally any sum required or estimated to be required for making good the loss or damage suffered by the Employer.
Provided, however, the Employer shall have no other responsibility in connection with the employees of the contractor, who shall, in no case, be treated as the employees of the Employer at any point of time.

19.1 AGE OF LABOUR

No labourer below the age of eighteen years shall be employed on the work.

19.2 FAIR WAGES

The contractor shall pay the labourers engaged by him on the work not less than a fair wages, which expression shall mean, whatever for time or piecework, the respective rates of wages fixed by Govt. Department as fair wages for the area payable to the different categories of labourers or those

Signature Not Verified
Digitally signed by SEKARAN M
Date: 2019.06.12 15:37:24 IST
Serial No : D251AF

notified under the Minimum wages Act for corresponding employees, of the Employer/Client, whichever may be higher.

The Contractor, shall notwithstanding the provisions to the contrary, cause to the paid a fair wage to labourer indirectly engaged on the works, including any labour engaged on the works, including any labour engaged by sub-contractor in connection with the said works as if the labourer had been directly employed by him.

NOTE:-

1. The contractor shall, before he commences the work, display, and correctly maintain, in a clean and legible conditions at a conspicuous place on the site, notices in English and in a language spoken by the majority of the workers, stating therein the rate of wages which have been fixed as fair wages and the hours of work for which such wages are earned and send a copy of such notices to the Engineer.

2. The Contractor shall maintain records of wages and other remuneration paid to his employees in such form as may be convenient and as per the requirements of the Employer/Engineer and the conciliation Officer (Central), Ministry of Labour, Government of India or such other authorised person appointed by the Central or State Government and the same shall include the following particulars of each worker:

i) Name, worker's number and grade.
ii) Rate of daily or monthly wage.
iii) Nature of work on which employed.
iv) Total number of days worked during each wage period.
v) Total amount payable for the work during each wage period.
vi) All deductions made from the wage with details in each case of the ground for which the deduction is made.
vii) Wage actually paid for each wage period.

3. The Contractor shall provide a Wage Slip for each worker employed on the Works.

4. The Wage records and Wage Slips shall be preserved for at least 12 months after the last entry.

19.3 SAFETY PROVISIONS

In respect of labour directly or indirectly employed in the work for the performance of the contractor's part of this agreement the contractor shall at his own expense arrange for the safety provisions as per Safety code of CPWD. Safety code framed from time to time and shall at his own expense provide for all facilities in connection therewith. In case the contractor fails to make arrangement and provide necessary facilities as aforesaid he shall be liable to pay a penalty of Rs.200/- for each default and in addition the Engineer shall be at liberty to make arrangement and provide facilities as aforesaid and recover the costs incurred in that behalf from the contractor.

19.4 The contractor shall submit, by the 5th and 19th of every month, to the Engineer a true statement showing, in respect of the second, half of the preceding month and the first half of the current month respectively:-

Digitally signed by ASHWIN D
Subject : CN=ASHWIN D, SERIALNUMBER=2035d4fe20bae89488f496e7d7fdab3e3fcc14
6a393f599e6d567e6c881eb03, ST=KARNATAKA, OID.2.5.4.17=560024, OU=
MANAGEMENT, O=NATIONAL SEEDS CORPORATION LTD, C=IN
User ID : ashwin.d
Serial No : D251AF

(1) the number of labourers employed by him on the work.
(2) their working hours.
(3) the wages paid to them.
(4) the accidents that occurred during the said fortnight showing the circumstances under which they happened and the extent of damage and injury caused by them,
(5) the number of female workers who have been allowed Maternity Benefit according to Clauses and amount paid to them.

Failing which the contractor shall be liable to pay to Employer, a sum not exceeding Rs.200/- for each default or materially incorrect statement. The decision of the Engineer shall be final in deducting from any bill due to the contractor amount levied as fine and be binding on the contractor.

19.5 HEALTH AND SANITATION

In respect of all labour directly or indirectly employed in the works for the performance of the contractor's part of this agreement, the contractor shall comply with or cause to be complied with all the rules framed by Govt. from time to time for the protection of health and sanitary arrangements for workers employed by Employer and its contractors.

19.6 MATERNITY BENEFITS

Leave and pay during leave shall be regulated as follows:

(1) Leave :

(i) In case of delivery, maternity leave not exceeding 8 weeks, 4 weeks upto and including the day of delivery and 4 weeks following that day.

(ii) In the case of miscarriage upto 3 weeks from the date of miscarriage.

(2) Pay :

(i) In the case of delivery leave day during maternity leave will be at the rate of the women's average daily earnings calculated on the total wages earned on the days when full time work was done during a period of 3 months immediately preceding the date on which she gives notice that she expects to be confide or at the rate of Rupees one only a day whichever is greater.

(ii) In case of miscarriage leave pay at the rate of average daily earning calculated on the total wages earned or the days when full time work was done during a period of 3 months immediately preceding the date of such miscarriage.

19.7

1. In the event of the contractor(s) committing a default or breach of any of the provisions of the Central Pub. Works Deptt., Contractor(s) Labour Regulations Model Rules for the protection of health and sanitary arrangements for the workers as amended from time to time or furnishing any information submitting or filling any statement under the provisions of the above Regulation and rules which is materially incorrect, he/they shall without prejudice to any other liability pay to the Employer a sum not exceeding Rs.200/- for every default breach or furnishing making, submitting, filling such materially incorrect statements and in the event of the contractor(s) defaulting continuously in this respect, the penalty may be enhanced to Rs.200/- per day for each day of default subject to a maximum of 5 percent of the estimated cost of the work put to the tender. The decision of the Engineer shall be final and binding on the parties.

2. Should it appear to the Engineer that the contractor(s) is/are not properly observing and

Signature :-
Subject : CN=ASHWIN D, SERIALNUMBER=2015d4fe20bae89488f496e7d7fdab3e3fcc14:
MANAGEMENT) OF NATIONAL SEEDS CORPORATION LTD, C=IN
User ID : ashwin.d
Serial No : D251AF

complying with the provisions of the Govt. Contractor Labour Regulations and Model Rules and the provisions of the Contract Labour (R&A) Central Rules 1971, for the protection of health and sanitary arrangements for work people employed by the contractor(s) (hereinafter referred the said Rules) the Engineer shall have power to give notice in writing to the contractor(s) requiring that the said Rules be compiled with and the amenities prescribed therein be provided to the work people within a reasonable time to be specified in the notice. If the contractor(s) shall fail within the period specified in the notice to comply with and observe the said Rules and to provide the amenities to the work people as aforesaid, the Engineer shall have the power to provide the amenities to herein before mentioned at the cost of the contractor(s) shall erect, make and maintain at his/their own expense and to approved standards all necessary as huts and sanitary arrangements required for his/their work people if the same shall not have been erected or construction, according to approved standard, the Engineer-in charge shall have power to give notice in writing to the contractor(s) requiring that the huts and sanitary arrangements be remodeled and/or reconstructed according to approved standard and if the contractor(s) shall fail to remodel or reconstruct such huts and sanitary arrangement according to approved standards within the period specified in the notice, the Engineer shall have the power to remodel or reconstruct such huts and sanitary arrangements according to approved standards at the cost of the Contracts(s).

3. The site selected for the camp shall be high ground, removed from jungle.

4. Disposal of excreta: The contractor(s) shall make necessary arrangements for the disposal of excreta from the latrines by transience or incineration which shall be according to the requirements laid down by the Local Health Authorities. If trenching or incineration is not allowed, the contractor(s) shall make arrangements for the removal to the excreta through the Municipal Committee/Authority and inform it about the number of labourers employed so that arrangements may be made by such committee authority for the removal of the excreta. All charges on this account shall be borne by the contractor and paid direct by him to the Municipal Committee/Authority. The contractor shall provide one sweeper for every 8 sets in case of dry system.

5. Drainage: The contractor(s) shall provide sufficient arrangements for draining away sludge water so as to keep the camp neat and tidy.

6. The contractor(s) shall make necessary arrangement of keeping the camp area sufficiently lighted to avoid accidents to the workers.

7. Sanitation : The contractor(s) shall make arrangements for conservancy and sanitation in the labour camps according to the rules of the Local Public Health and Medical authorities

19.8 The contractor(s) shall at his/their own cost provide sufficient number of huts (hereinafter referred to as the camp) of the following specifications on a suitable plot of land to be approved by the Engineer:

1. a) the minimum height of each the eaves level shall be 2.10m (7 ft.) and to the floor area to be provided at the rate of 2.7 Sqm. (30 Sq.ft.) for each member of the worker's family staying with the labourer.

b) The contractor(s) shall in addition construct suitable cooking places having a minimum area of 1.80 m x 1.50 m (6'x5') adjacent to the hut.

c) The contractor(s) shall also construct temporary latrines and urinals for the use of the

Signature :-
Subject : CN=ASHWIN D, SERIALNUMBER=2035d4fe20bae89488f496e7d7fdab3e3fcc14
6a393f599e6d567e6c881eb03, ST=KARNATAKA, OID.2.5.4.17=560024, OU=
User ID : ashwind
Serial No : D251AF

labourers each on the scale of not less than four per each one hundred of the total strength, separate latrines and urinals being provided for women.

d) The contractor(s) shall construct sufficient number of bathing & washing places, one undid for every 25 persons residing in the camp. These bathing and washing places shall be suitably screened.

2. a) All the huts shall have walls of sun dried or burnt bricks laid in mud mortar or other suitable local materials as may be approved by the Engineer. The floor may be kutchha but plastered with mud gobri and shall be at least 15 cm (6")
above the surrounding ground. The roofs shall be laid with thatch or any other materials as may be approved by the Engineer. The Contractor shall ensure that throughout the period of their occupation the roof remain water-tight.

b) The contractor(s) shall provide each hut with proper ventilation.

c) All doors, windows and ventilators shall be provided with suitable leaves for security purpose.

d) There shall be kept an open space of at least 7.2m (8 yards) between the rows of huts which may be reduced to 6 m. (20 ft.) according to the availability of site with construction will be allowed.

3. WATER SUPPLY:

The Contractor(s) shall provide adequate supply of water for the use of labourers. The provisions shall not be less than 2 gallons of pure and whole some water per head per day for drinking purposes and 3 gallons of clean water per head per day for bathing and washing purpose. Where piped water supply is available, supply shall be at shall pay all fees and charges therefore.

4. CONDITIONS FOR THE GRANT OF MATERNITY LEAVE :

No maternity leave benefit shall be admissible to a woman unless she has been employed for a total period of not less than 6 months immediately proceedings the date on which she proceeds on leave.

5. The contractor shall maintain a Register of Maternity (benefit) in the prescribed form as shown below in Annexure I and II the same shall be kept at the place of work.

19.9 The Engineer-in-charge may require the contractor to dismiss or remove from the site of the work any person or persons in the contractors employ upon the work who may be incompetent or misconduct himself and the contractor should forthwith comply with such requirements.

19.10 It shall be the responsibility of the contractor to see that the building under construction is not occupied by anybody unauthorized during construction and is hander over to the Engineer with vacant possession of complete building. If such building though completed is occupied illegally, then the Engineer shall have the option to refuse to accept the said buildings. Any delay in acceptance on this account will be treated as delay in completion and for such delay a levy up to 5% of the estimated cost put to the tender may be imposed by the Engineer whose decision shall be final both with regard to the justification and quantum and be binding on the Contractor.

Signature
Subject: CN=ASHWIN D, SERIALNUMBER=2053d4f620bdae8149814968747fdab3e31cc14:
6a393f599e6d567e6c881eb03, ST=KARNATAKA, OID.2.5.4.17=560024, OU=
MANAGEMENT, O=NATIONAL SEEDS CORPORATION LTD, C=IN
User ID : ashwin.d
Serial No : D251AF

However, the Employer may require the contractor to remove the illegal occupation any time on or before construction and delivery.

CLAUSE: 20 MINIMUM WAGES ACT TO BE COMPLETED WITH

The contractor shall comply with all the provisions of the Minimum Wages Act, 1948, Contract Labour (Regulations and Abolition) Act, 1970 amended from time to time and other Laws affecting contract labour that may be brought into force from time to time.

CLAUSE : 21 WORK NOT TO BE SUBLET ACTION IN CASE OF INSOLVENCY

The contract shall not be assigned or sublet without the written approval of the Engineer and if the contractor shall assign or sublet his contract, or attempt to do so, or become insolvent or commence any insolvency proceedings or make any composition with his creditors or attempt to do so, or if any bribe, gratuity, gift, loan,. perquisite, reward or advantage pecuniary or otherwise, shall either directly or indirectly, be given promised or offered by the Contractor or any of his servant or agent to any public officer or person in the employ of NSC in any way relating to his office or employment, or if any such officer or person shall become if any way directly or indirectly interested in the contract, the Engineer on behalf of the Managing Director shall have power to adopt any of the courses specified in Clause 3 as he may deem best suited in the interest of NSC and in the event of any of these courses being adopted the consequences specified in the said Clause 3 shall ensure.

CLAUSE : 22 All sums payable by way of compensation under nay of these conditions shall be considered as reasonable compensation to be supplied to the use of Employer without reference to the actual loss or damage sustained and whether or not any damage shall have been sustained.

CLAUSE: 23 CHANGES IN FIRM's CONSTITUTION TO BE INTIMATED

Where the contractor is a partnership firm, the previous approval in writing of the Engineer shall be obtained before any changes is made in the constitution of the firm. Where the contractor is an individual or a Hindu undivided family business concern such approval as aforesaid shall likewise be obtained before the contractor enters into any partnership agreement where under the partnership firm would have the right to carry out the work as aforesaid is not obtained, the contract shall be deemed to have been as singed in the contravention of Clause 21 hereof and the same action may be taken, and the same consequences shall ensure as provided in the said Clause 21.

CLAUSE: 24

All works to be executed under the contract shall be executed under the direction and subject to the approval in all respect of the Engineer who shall be entitled to directly at what point or points and in what manner they are to be commenced, and from time to time carried on.

CLAUSE: 25 SETTLEMENT OF DISPUTES AND ARBITRATION

25.1 ENGINEERS' DECISION

If a dispute of any kind whatsoever arises between the Employer and the contractor in connection with, or arising out of, the contract or the execution of the works, whether during the execution of the works or after their completion and whether before or after repudiation or other termination of the contract, including any dispute as to any opinion, instruction, determination, certificate or valuation of the Engineer, the matter in dispute shall, in the first place, be referred in writing to the Engineer, with a copy to the other party. Such reference shall state that it is made pursuant to this clause. No letter than the eighty fourth day after the day on which he received such reference the Engineer shall give notice of his decision to the employer and the contractor. Such

Signature :-
MANAGEMENT, O=NATIONAL SEEDS CORPORATION LTD, C=IN
User ID : ashwin.d
Serial No : D251AF

decision shall state that it is made pursuant to the Clause.

Unless the contract has already been repudiated or terminated, the contractor shall, in every case, continue to proceed with the works with all due diligence and the contractor and the employer shall give effect forthwith to every such decision of the Engineer unless and until the same shall be revised, as hereinafter provided, in an amicable settlement or an arbitrator award.

If either the Employer or the contractor be dissatisfied with any decision of the Engineer or if the Engineer fails to give notice of his decision on or before the eighty fourth day after the day on which he received the reference, then either the Employer or the contractor may, on or before the seventieth day after the day on which he received notice of such decision, on or before the seventieth day after the day on which the said period of 84 days expired, as the case may be given notice to the other party, with a copy for information to the Engineer, of his intention to commence arbitration, as herein after provided, as to the matter in dispute. Such notice shall establish the entitlement of the party giving the same to commence arbitration, as hereinafter provided as to such dispute and subject to Sub Clause 25.4 no arbitration in respect thereof may be commenced unless such notice is given.

If the Engineer has given notice of his decision as to a matter in dispute to the Employer and the Contractor and no notice of intention to commence arbitration as to such dispute has been given by either the Employer or the Contractor on or before the seventieth day after the day on which the parties received notice as to such decision from the Engineer, the said decision shall be come final and binding upon the employer and the contractor. Request for arbitration by the contractor shall be entertained by the employer only after completion of work.

25.2 AMICABLE SETTLEMENT

Where notice of intention to commence arbitration as to a dispute has been given in accordance with Sub Clause 25.1 arbitration of such dispute shall not be commenced unless and attempt has first been made by the parties to settle such dispute amicably. Provided that, unless the parties otherwise agree, arbitration may be commenced on or after the fifty sixth day after the day on which notice of intention to commence arbitration of such dispute was given, whether or not any attempt at amicable settlement thereof has been made.

25.3 ARBITRATION:-

The arbitration on this tender shall be governed by the following conditions:-

Except where otherwise provided for in the sub contract all questions and disputes relating to the meaning of instructions herein before mentioned or as to any other question, claim, right matter of anything whatsoever, in any arising out of or relating to the sub contract, specification, estimates, instructions, orders or these conditions or otherwise concerning the works, or the execution or failure to execute the same whether arising during the progress of the work or after completion of abandonment thereof or any matter directly or indirectly connected with this agreement shall be referred to the sole arbitration of the Managing Director of NSC and if the
M.D is unable or unwilling to act as such, then the matter shall be referred to sole arbitration of such other person appointed by the M.D. NSC willing to act as such arbitrator. There will be no objection, if the Arbitrator, so appointed is an employee of NSC provided that the person shall not have been directly connected with the execution of the work of the project. In case the arbitrator so appointed is unable to act for any reasons. Managing Director, NSC in the event of such inability shall appoint another person to act as Arbitrator in accordance with the terms of the sub contract. Such person shall be entitled to proceed with the reference from the stage at which it was left by his predecessor. It is also a term of this contract that no person other than a person appointed by Managing Director, NSC as aforesaid should act as Arbitrator.

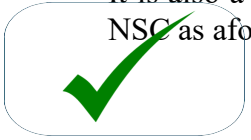

Subject as aforesaid the provision of the Arbitration Act, 1940 or any statutory modification or reenactment thereof and the rules made there under and for the time being in force shall apply to the arbitration proceeding under this clause.It is a term of the sub contract that the party seeking arbitration shall specify the dispute to be referred to arbitration under this clause together with the amount or amounts claimed in respect of each dispute(s). The arbitrator may from time to time with the consent of the parties enlarge the time for making and publishing the award. The work under the sub contract shall nevertheless continue during the arbitration/proceedings. The Arbitrator shall be deemed to have entered on the reference on the date he issues notice to both the parties fixing the date of the first hearing. The Arbitrator shall give a separate reasoned award in respect of each reference referred to.

The ward of the arbitrator shall be conclusive and binding on all parties to this contract.

CLAUSE: 26 CONTRACTORS TO INDEMNIFY GOVT. AGAINST PATENT RIGHTS

The contractor shall fully indemnify the Employer against any action claim or proceeding relating to infringement or use of any patent or design or any alleged patent or design rights and shall pay any royalties which may be payable in respect of any article or part thereof included in the contract. In the event of any claims made under or action brought against Employer in respect of any such matters as aforesaid the contractor shall be immediately notified thereof and the contractor shall be at liberty, at his own expenses, to settle any dispute or to conduct any litigation that may arise there from. Provided that the contractor shall not be liable to indemnify the Employer if the infringe of the patent or design or any alleged patent or design right is the direct result of an order passed by the Engineer in this behalf.

CLAUSE: 27 LUMPSUM PROVISIONS IN THE TENDER

When the estimate on which a tender is made includes lump sums in respect of parts of the work the contractor shall be entitled to payment in respect the items of work

involved or the part of the work in question at the same rates as are payable under this contract for such items or if the part of the work in question is not, in the opinion of the Engineer capable of measurement, the Engineer may at his discretion pay the lump sum amount entered in the estimates and the certificate in writing of the Engineer shall be final and conclusive against the contractor with regard to any sum or sums payable to his under the provisions of the clause.

CLAUSE: 28 ACTION WHERE NO SPECIFICATIONS ARE SPECIFIED

In the case of any class or work for which there is no such specification as is mentioned in Clause (1), such work shall be carried out in accordance with the district specification and in the event of there being no district specification, then in such case the work shall be carried out in all respect in accordance with the instructions and requirements of the Engineer.

CLAUSE: 29 WITHHOLDING AND LIEN IN RESPECT OF SUMS DUE FROM CONTRACTOR

29.1 Whenever any claim or claims for payment of a sum of money arises out of or under the contract against the contractor the Engineer or Employer shall be entitled to withhold and also have a

Signature :-
Subject : CN=ASHWIN D, SERIALNUMBER=2035d4fe20bee89488f496e7d3fdab3e3fc14:
MANAGEMENT, O=NATIONAL SEEDS CORPORATION LTD, C=IN
User ID : ashwin.d
Serial No : D251AF

lien to retain such sum or sums in whole or in part from the security, if any deposited by the Contractor and for the purpose aforesaid, the Engineer or Employer shall be entitled to withhold the security deposit, if any, furnished as the case may be and also have a lien over the same pending finalization or adjudication of any such claim. In the event of the security being in sufficient to cover the claimed amount or amounts or if not security has been taken from the contractor the Engineer or Employer shall be entitled to withhold and have a lien to retain to the extent of such claimed amount or amounts referred to above from any sum or sums, found payable or which at any time there-after become payable to the contractor under the same contract or any other contract pending finalization or adjudication of any such claims.

It is an agreed terms of the contract that the sum of money or moneys so withhold or retained, under the lien referred to above by the Engineer or Employer will be kept withheld or retained as such by the Engineer/Employer till the claim arising out of or under the contract is determined by the Arbitrator, and that the contractor will have no claim for interest or damages whatsoever on any account in respect of such withholding or retention under the lien referred to above and duly notified as such to the contractor. For the purpose of this clause, where the contractor is a partnership firm or limited company, the Engineer or Employer shall be entitled to withhold and also have a lien to retain towards such claimed amount or amounts in whole or in part from any sum found payable to any partner/limited company as the case may be, whether in his individual capacity or otherwise.

29.2 Employer shall have the right to cause and audit and technical examination of the work and the final bills of the contractor including all supporting vouchers, abstract etc. to be made after payment of the final bill and if as a result of such audit and technical examination any sum is found to have been over paid in respect of any work done by the contractor under the contract or any work claimed by him to have been done by him under the contract and found not to have been executed, the contractor shall be liable to refund the amount of overpayment and it shall be lawful for the Employer to recover the same from him in the manner prescribed in sub-clause (I) of this clause or in any other manner legally permissible and if it is found that the contractor was paid less than what was due to him under it, the amount of such under payment shall be duly made by the Employer.

Provided that Employer shall not be entitled to recover any sum overpaid, nor the contractor shall be entitled to payment of any sum paid short where such payment has been agreed upon between the Employer or Engineer on the one hand and the contractor on the other under any term of the contract permitting payment for work after assessment by the Employer or the Engineer.

29.3 LIEN IN RESPECT OF CLAIMS IN OTHER CONTRACTS

Any sum of money due and payable to the contractor (including the security deposit returnable to him as under the contract) may be withhold or retained by way lien by the Engineer or the Employer or any other contracting person or persons through Engineer against any claim of the Engineer or Employer or such person or persons. In respect of payment of a sum money arising out of or under any other contract made by the Contractor with the Engineer or the Employer or with such other person or persons.

It is an agreed term of the contract that the sum of money so withhold or retained under this clause by the Engineer or the Employer or till his claim arising out of in the same contract or any other contract is either mutually settled or determined by the arbitration clause or by the competent court as the case may be and that the contractor shall have not claim for interest or damage whatsoever on this account or on any other ground in respect of any sum of money withhold or retained under clause and duly notified as such to the contractor.

CLAUSE: 30 EMPLOYMENT OF COAL MINING OR CONTROLLED AREA MINING LABOUR NOT PERMISSIBLE.

The contractor shall not employ coal mining or controlled area labour falling under any category whatsoever on or in connection with the work or recruit labour from area within a radius of 32 km (20 miles of the controlled area). Subject as above the Contractor shall employ imported labour on i.e deposit imported labour or labours imported by the Contractor from area from which

Digitally signed by
Subject : CN=ASHWIN D, SERIALNUMBER=2035d4fe20bae89488f496e7d7feab3e3fcc14:
6a393f599e6d967e6c881eb03, ST=KARNATAKA, OID.2.5.4.17=560024, OU=
User ID : ashwin.d
Serial No : D251AF

import is permitted.

Where ceiling price for imported labour has been fixed by state or Regional Labour Committees not more than that ceiling price shall be paid to the labour by the Contractor.

The Contractor shall immediately remove any labourer who may be pointed out by the Engineer being a coal mining or controlled area labourer. Failure to do so shall render the Contractor liable to pay to employer a sum calculated at the rate of Rs.10 per labourer. The certificate of the Engineer about the number of causal mining or controlled area labour and the number of days which they worked shall be final and binding on the contractor.

It is declared and agreed between the parties that the aforesaid stipulation in this clauses is one in which the public are interested within the meaning of the exception of Section 74 of Indian Contract Act 1872.

Explanation - Controlled Area means the following areas - Districts of Dhanbad, Hazaribagh, Jamtra- a sub-division under Santali Pargana Commissionery, Districts of Bankuara, Birbhum, Bardwan district of Bilaspur.

Any other area which may be declared as controlled Area by or with the approval of the Central Government.

CLAUSE: 31 UN-FILTERED WATER SUPPLY

The Contractor(s) shall make his/their own arrangements for unfiltered water required for the work and nothing extra will be paid for the same. This will be subject to the following conditions :

i) That the water used by the contractor(s) shall be fit for construction purposes to the satisfaction of the Engineer.

ii) The Engineer shall make alternative arrangements for supply of water at the risk and cost of contractor(s) if the arrangements made by the Contractor(s) for procurement of water are in the opinion of the Engineer unsatisfactory.

31.1 DEPARTMENTAL WATER IF AVAILABLE

Unfiltered water if available will be supplied to the Contractor by the Engineer subject to the following conditions:

i) The water charges @ 1% shall be recovered on gross amount of the work done.
ii) The Contractor (s) shall make his/their own arrangements of water connection and the laying of pipe lines from existing mains or source of supply.

iii) The Department do not guarantee to maintain uninterrupted supply of water, and it will be incumbent on the Contractor(s) to make alternative arrangement of water at his/their own cost in the event of any temporary break down in water supply of the employee so that the progress of his/their work is not held up for want of water. No claim of damage of refund of water charges will be entertained on account of such break down.

CLAUSE: 32 ALTERNATE WATER ARRANGEMENTS

Where there is no piped water supply arrangement and the water is taken by the Contractor from the wells or hand pump constructed by the Employer no charges shall be recovered from the

Signature :-
Name : ASHWIN D, SERIALNUMBER, OU=Certificate, OU=Authority, OU=3e, E=a
MANAGEMENT, O=NATIONAL SEEDS CORPORATION LTD, C=IN
User ID : ashwin.d
Serial No : D251AF

Contractor on that account. The contractor shall however, draw water at such hours of the day that does not interfere with the normal use for which the hand pump and wells are intended. He will also be responsible for all damage and abnormal repairs arising out of his use, the cost of which shall be recoverable from him. The Engineer shall be the final authority to determine the cost recoverable from the contractor on this account.

The Contractor shall be allowed to construct temporary wells in land for taking water for construction purposes only after he has got permission of the Engineer in writing. No charges shall be recovered from the Contractor on this account by the Contractor shall be required to provide necessary safety arrangements to avoid any accidents or damage to adjacent building road and service lines. He shall be responsible for any accident or damage caused due to construction and subsequent maintenance of the wells and shall restore the ground to its original condition after the walls are dismantled on completion of the work.

CLAUSE: 33 HIRE OF PLANT AND MACHINERY

i) The contractor shall arrange at his own expense all tools, plants, machinery and equipment (hereinafter referred to as T & P) required for execution of the work except for the Plant & Machinery listed in Schedule 'C' and stipulated for issue to the contractor. If the contractor requires any item of T & P on hire from the T & P available with the Employer over and above the T & P stipulated for issue, the Employer will, if such item is available, hire it to the contractor at rates to be agreed upon between him and the Engineer. In such a case all the conditions hereunder for issue of T & P shall also be applicable to such T & P as is agreed to be issued.

ii) Plant & Machinery when supplied shall be made over and taken back at the Departmental equipment shed at _____ and the Contractor shall bear the cost of their carriage from the shed to the site of work and back. The contractors shall be responsible to return the plant & machinery with condition in which it was handed over to him and he shall be responsible for all damage caused to the said plant & machinery at the site of work for elsewhere in operations & otherwise during transit including damage to or loss of plants and for all losses due to his failure to return the same soon after the completion of the work for which it was issued. The Engineer shall be the sole judge to determine the liability of the contractor and its extent in this and regard and his decision shall be final & binding on the contractor.

iii) The plant & machinery as stipulated above will be issued as & when available and if required by the contractor shall his program of work according to the availability of the plant & machinery and no claim, whatsoever, will be entertained from him for any delay in supply by the Department.

iv.) The hire charges shall be recovered at the prescribed rates and from inclusive of the date of the plant and machinery is made over up to and inclusive of the date of its return in good order even though the same may not have working for any cause except for major breakdown due to no fault.

v) Ordinarily, no plant and machinery shall work for more than 8 hours a day inclusive of one hour lunch break. In case of an urgent work, however, the Engineer may at his discretion, allow the plant and machinery to be worked for more than normal period of 8 hours a day in that case the hourly hire charges for overtime to be borne by the contractor.

vi) Log book for recording the hours of daily work for each of the plant and machinery supplied to the contractor will be maintained by the Department and will be attested by the contractor or his authorized agent daily.

vii) In the case of concrete mixers, the contractor shall arrange to get the hopper cleaned and the drum washed at the close of the work each day or each occasion.

viii) In case of road rollers for consolidation are employed by the contractor himself, log book for such rollers shall be maintained in the same manner as is done in case of departmental rollers maximum quantity of any items to be consolidated for each roller day shall be also be same as in

Signature Not Verified
Digitally signed by ASWINI S, SERIALNUMBER=2a335e44e20b1e5948ef4968e97fdd8a3e74e14a6a393f599e6d567e6c881eb03, ST=KARNATAKA, OID.2.5.4.17=560024, OU=MANAGEMENT, O=NATIONAL SEEDS CORPORATION LTD, C=IN
Date: 2021.11.01 11:41:31 IST
Serial No : D251AF

Annexure.

ix) For less use of Rollers, recovery for the less rollers days shall be made at the stipulated issue rate.

x) The contractor shall be responsible to return the plant and machinery in the conditions in which it was handed over to him and he shall be responsible for all damages caused to the said plant and machinery at the site of work or elsewhere when the operation or otherwise or during transit including damage to or loss of parts, and for all losses due to his failure and return the same soon after the completion of the work for which it was issued. The Engineer shall be the sole authority to determine the liability of the contractor and its extent in this regard and his decision shall be final and binding on the contractor.

xi) The contractor shall have to engage a full time chowkidar to ensure watch & ward for the safety of machinery and materials supplied by the employer to the contractor related to this contract.

CLAUSE: 34 CONDITION RELATING TO USE OF ASPHALT MATERIALS

i) The contractor undertakes to make arrangements for the supervision of the work by the firm supplying the tar or bitumen used.

ii) The contractor shall collect the total quantity of tar or bitumen required for the work as per standard formulas before the process of the painting is started and shall hypothecate it to the Engineer. If ay bitumen or tar remains unused on completion of the work on account of lesser use of materials in actual execution for reasons other than authorised changes of specification & abandonment of portion of work, a corresponding deduction equivalent to the cost of unused materials as determined by the Engineer shall be made and the materials returned to the contractors. Although the materials are hypothecated to employer the contractor undertakes the responsibility for their proper watch safe custody and protection against all risks. The materials shall not be removed from site of work without the consent of the Engineer in writing.

iii) The contractor shall be responsible for rectifying defects noticed within a year from the date of completion of the work and the portion of the security deposit relating to asphaltic work shall be refunded after the expiry of this period.

CLAUSE: 35 EMPLOYMENT OF TECHNICAL STAFF AND EMPLOYEES

Contractors superintendence, supervision, technical staff and employees.

i. The contractor shall provide all necessary superintendence during execution of the work and as along thereafter as may be necessary for proper fulfilling of the obligations under the contract.

The contractor shall immediately after receiving letter of acceptance of the tender and before commencement of the work, intimate in writing to the Engineer the name, qualifications, experience, age, address and other particulars along with certificates, of the principal technical representative to be in charge of the work. Such qualifications and experience shall not be lower than specified in schedule 'f'. The Engineer shall within 15 days of receipt of such communication intimate in writing his approval or otherwise of such a representative according to the provisions on the contractor in this respect. Such a principal technical representative shall be appointed by the contractor soon after receipt of the approval from Engineer and shall be available at site within fifteen days of start of work.

If the contractor (or any partner in case of firm/company) who himself has such qualifications, it will not be necessary for the said contractor to appoint such a principal technical representative but the contractor shall designate and appoint a responsible agent to represent him and to be present at the work whenever the contractor is not in a position to be so present. All the provisions applicable to the principal technical representative under the Clause will also be applicable in such a case to contractor or his responsible agent. The principal technical representative and/or the contractor shall on receiving reasonable notice from the Engineer or his designated representative(s) in charge of the

Signature :-
Subject : CN=ASHWIN D, SERIALNUMBER=2035d4fe29bae89d88f496e7d7fdab3e3fcc14
MANAGEMENT, O=NATIONAL SEEDS CORPORATION LTD, C=IN
User ID : ashwin.d
Serial No : D251AF

work in writing or in person or otherwise, present himself to the Engineer and/or at the site of work, as required, to take instructions.

Instructions given to the principal technical representative or the responsible agent shall be deemed to have the same force as if these have been given to the contractor. The principal technical representative and/or the contractor or his responsible authorized agent shall be actually available at site during important stages of execution of work, recording of measurement of works and when ever so required by the Engineer, his designated representative in the site order book and shall affix his signature in token of noting down the instructions and in token of acceptance of measurements.

If the Engineer whose decision in this respect is final and binding on the contractor, is convinced that no such technical representative or agent is effectively appointed or is effectively attending or fulfilling the provision of this clause, a recovery shall be effected from the contractor as specified in schedule 'f' and the decision of the Engineer as recorded in the site order book and measurement recorded in measurement book shall be final and binding on the contractor. Further, if the contractor fails to appoint a suitable technical representative or responsible agent and if such appointed persons are not effectively present or do not discharge their responsibilities satisfactorily, the Engineer shall have full powers to suspend the execution of the work until such date as a suitable agent is appointed and the contractor shall be held responsible for the delay so caused to the work. The contractor shall submit a certificate of employment of the technical representative/responsible agent along with every on account bill/fixed bill and shall produce evidence if at any time so required by the Engineer.

The contractor shall provide and employ on the site only such technical assistance as are skilled and experienced in their respective fields and such foremen and supervisory staff as are competent to give proper supervision to the work.

The contractor shall provide and employ skilled, semiskilled and unskilled labour as is necessary for proper and timely execution of the work.

The Engineer shall be at liberty to object to and require the contractor to remove from the works any person who in his opinion misconducts himself or is incompetent or negligent in the performance of his duties or whose employment is otherwise considered by the Engineer to be undesirable. Such person shall not be employed again at works site without the written permission of the Engineer and the persons so removed shall be replaced as soon as possible by competent substituted.

CLAUSE: 36 APPRENTICES ACT PROVISIONS TO BE COMPLIED WITH

The contractor shall comply with provisions of the Apprentices Act 1961 and the Rules and Orders issued there under from time to time. If he fails to do so, his failure will be a breach of contract and the Engineer may, in his discretion cancel the contract. The Contractor shall also be liable for any pecuniary liability arising on account of any violation by him of the provisions of the Act.

CLAUSE: 37 The whole work, may be spilt up between two or more contractors or accepted in part and not in entirely, if considered expedient.

CLAUSE: 38 LEVY/TAXES PAYABLE BY CONTRACTOR

i) Sales tax or any other tax on material in respect of this contract shall be payable by contractor and Employer shall not entertain any claim whatsoever in this respect.

ii) The contractor shall obtain necessary permit and have to deposit royalty for supply of the red bajri, stone, moorum etc. from local authorities.

iii) If pursuant to on under any law such notification or order any royalty, or the like becomes payable by the Employer by the contractor to the State Government. Local authorities in respect of any material used by the contractor in the works then in such a case. It shall be lawful to the

DSAVerified
Subject : CN=ASHWIN D, SERIALNUMBER=2035d4fe20bae89488f496e7d7fdab3e3fcc14:
MANAGEMENT, O=NATIONAL SEEDS CORPORATION LTD, C=IN
User ID : ashwin.d
Serial No : D251AF

Employer and it will have the right and be entitled to recover the amount paid in the circumstances as aforesaid from the dues of the contractor.

CLAUSE: 39 TERMINATION OF CONTRACT ON DEATH OF CONTRACTOR

Without prejudice to any of the rights or remedies under this contract, if the Contractor dies, the Engineer on behalf of the Employer shall have the option of terminating the contract without compensation to the Contractor.

CLAUSE: 40

IF RELATION WORKING IN NSC THEN THE CONTRACTOR

NOT ALLOWED TO TENDER.

The contractor shall not be permitted to tender for works in the NSC in which his near relative is posted capacity between the grade of superintending Engineer and Assistant Engineer (both inclusive) and similar cadre officials of other discipline. He shall also intimate the names of persons who are working with him in any capacity or are subsequently employed by him and who are near relative to any officer in the National Seed Corporation. Any breach of this condition by the Contractor would render him liable to be removed from the work of these Corporations.

NOTE:

By the terms 'near relatives' is meant wife, husband, parents and grant parents, children and grand children, brothers and sisters, uncles, aunts and cousins and their corresponding in laws.

CLAUSE: 41 NO ENGINEER TO WORK AS CONTRACTOR WITHIN TWO YEARS OF RETIREMENT

No Engineer or other officer of Employer or client is allowed to work as a contractor without prior permission of Employer. This contract is liable to be cancelled if either the contractor or any of his employees is found at any time to be such a person who had not obtained the permission of Employer aforesaid, before submission of the tender or engagement in the contractor's service as the case may be.

CLAUSE: 42 RETURN OF MATERIAL AND RECOVERY FOR MATERIAL ISSUED EXCESS

i) After completion of the work and also at any intermediate stage in the event of non-reconciliation of materials issued, consumed and in balance (see Clause 10), theoretical quantity of materials issued by the Employer for use in the work shall be calculated on the basis and method given hereunder.

a) Quantity of cement & bitumen shall be calculated o the basis of quantity of cement & bitumen required for different items of work as shown in the Schedule of Rates mentioned in Schedule 'F'. In case any item is executed for which standard constant executed for which standard constants for the consumption of cement of bitumen are not available in the above mentioned schedule/statement or can not be derived from the same shall be calculated on the basis of standard formula to be laid down by the Engineer.

b) Theoretical quantity of steel reinforcement of structural steel sections shall be taken as the quantity required as per design or as authorized by the Engineer, including authorized lappages, chairs etc. plus 3% wastage due to cutting into pieces, such theoretical quantity being determined and compared with the actual issues each diameter wise, section wise and category wise separately.

c) Theoretical quantity of GI & CI or other pipes, conduits, wires and cables, pig lead and

Signature :-
Subject : CN=ASHWIN D, SERIALNUMBER=2035d4fe20bae89488f496e7d7fdab3e3fcc14
6a393f599e6d567e6c881ab03, ST=KARNATAKA, OID.2.5.4.17=560024, OU=
Serial No : D251AF

GI/MS sheets shall be taken as quantity actually required and measured plus5% of wastage due to cutting into pieces (except in the case of GI/MS sheets shall be 10%) such determination and comparison being made diameter wise and category wise.

d) For any other material as per actual requirements.

ii) Over the theoretical quantities of materials so computed a variation shall be allowed as specified in Schedule 'F'. The difference in the net quantities of material actually issued to the contractor an the theoretical quantities including such authorized variation, if not returned by the contractor or if not fully reconciled to the satisfaction of the Engineer to this effect shall be recovered at the rates specified in Schedule 'F' without prejudice to the provision of the relevant conditions regarding return of materials governing the contract. Decision of Engineer in regard to theoretical quantities of materials, which should have been actually used as per the Annexure of the standard schedule of rates and recovery at rates specified in Schedule 'F', shall be final and binding on the contractor.

For non schedules items, the decision of the Engineer regarding theoretical quantities of materials which should have been actually used, shall be final and binding on the contractor.

iii) The said action under this clause is without prejudice to the right of the Employer to take action against the contractor under any other conditions of contract for not doing the work according to the prescribed specifications.

CLAUSE: 43 COMPENSATION DURING WAR LIKE SITUATION

The work (whether fully constructed or not) and all materials, machines, tools and plants, scaffolding, temporary buildings and other things connected therewith shall be at the risk of the contractor until, the work has been delivered to the Engineer and a certificate from him to that effect obtained. In the event of the work or any materials properly brought to the site for incorporation in the work being damaged or destroyed in consequence of hostilities or war like operation the contractor shall, when ordered in writing by the Engineer, remove in store all serviceable materials salvaged from the damaged work and shall be pair at the contract rates in accordance with the provision of this agreement for the work of clearing the site of debris, stacking removal of serviceable materials and for the construction of all works ordered by the Engineer such payments being in addition to compensation up to the value of the work, originally executed before being damaged or destroyed and not paid for. In case of works damaged or destroyed but not already measured and paid for the compensation shall be assessed by the Engineer up to Rs.5,000/- and by the Employer concerned for a higher amount. The contractor shall be paid for the damage destruction suffered and for the restoring the material at the rates based on the analysis of rates tendered for in accordance with the provision of this agreement. The certificate of the Engineer regarding the qty. & quality of materials and the purpose for which they were collected shall be final and binding on all parties to this contract.

Provided always that no compensation shall be payable for any loss in consequence of hostilities or war like operations (a) unless the contractor had taken all such precautions against air raid as are deemed necessary by the A.R.P Officer or the Engineer, (b) for any materials etc. not on the site of the work or for any tools and plant, machinery, scaffolding temporary buildings and other things not intended for the work.

In the event of the contractor having to carry out reconstructions as aforesaid, he shall be allowed such extension of time for its completion as is considered reasonable by the Engineer.

CLAUSE: 44 RELEASE OF SECURITY DEPOSIT AFTER LABOUR CLEARANCE

Security deposit will be refunded on furnishing labour clearance certificate from Labour Officer by the contractor as per CPWD guidelines.

CLAUSE: 45 MONTHLY PROGRESS REPORT

Signature :
Subject : CN=ASHWIN D, SERIALNUMBER=2035d4fe20bae89488f496e7d7fdab3e3fcc14
6a393f599e6d567e6c881eb03, ST=KARNATAKA, OID.2.5.4.17=560024, OU=
MANAGEMENT, O=NATIONAL INSTITUTE FOR [illegible]
User ID : ashwin.d
Serial No : D251AF

The contractor shall submit in quadruplicate a monthly progress report to the Engineer before the second day of every month. The format of the report shall be decided in consultation with the Engineer, to meet the work schedule requirement.

CLAUSE: 46 QUALITY OF MATERIALS, PLANT AND WORKMANSHIP

All materials, Plant and Workmanship shall be

a) of the respective kinds described in the Contract and in accordance with the Engineer's instructions, and

b) subjected from time to time to such tests as the Engineer may require at the place of manufacture, fabrication or on the Site or at such other place or places as maybe specified in the Contract or at all or any of such places.

The contractor shall provide such assistance, labour, electricity, fuels, stores, apparatus and instruments as are normally required for examining, measuring and testing any materials or Plant and shall supply samples of materials, before incorporation in the works, for testing as may be selected and required by the Engineer. The contractor shall bear the cost of samples, testing fee, if tested out side in laboratory for testing of material provided in the contract or any other material/test not provided in the contract and Engineer feel that the test of this kind is necessary.

CLAUSE: 47 OPPORTUNITIES/FACILITIES FOR OTHER CONTRACTORS

Some work on the site may be done through other contractors. In the event of any such work, the Contractor shall have to work in full cooperation and in close coordination with other contractor(s). The contractor shall, in accordance with the requirements of the Engineer, afford all reasonable opportunities for carrying out the work of other contractors employed by the Engineer and their workmen and to the workmen of the Employer and of any other duly constituted authorities who may be employed in the execution of near the site of any work not included in the contract or any contract which the Employer may enter into in connection with or ancillary to the works.

Any dispute that may arise in this connection will have to be amicably settled by the contractors amongst themselves. If they fail to do so, the matter shall be referred to the Engineer whose decision will be final and binding on all the parties, provided that if as a result of such a decision of the Engineer any financial obligations or liabilities arise amongst the contractors, the same shall be settled between themselves and the Engineer/Employer shall remain indemnified against any claim arising out of his decision.

If however pursuant to Sub-Clause (above) the Contractor shall, on the written request of the Engineer.

a) make available to any such other contractor, or to the Employer or any such authority, any roads or ways for the maintenance of which the Contractor is responsible or

b) permit the use, by any such, of Temporary works or Contractor's Equipment on the Site or

c) provide any other service of whatsoever nature for any such the Engineer shall determine an addition to the contract price in accordance with Clause-12 and shall notify the contractor accordingly.

d) The Contractor's attention is directed to the fact that during the contract period, other contractors and the Employer's departmental staff will be carrying out various works and maintenance including diversion of drains, roads, rails, oil pipe lines, electric cables and other services on and through areas in which the Contractor will be working. The contractor shall maintain close liaison with the Engineer to avoid the possibility of delay or inconvenience as a result of these

Signature :
Subject : CN=ASHWIN D, SERIALNUMBER=2035d4fe20bae89488f496e7d7fdab3e3fcc14:
6a393f599e6d567e6c883eb0B, ST=KARNATAKA, OID.2.5.4.12=560034, OU=
User ID : ashwin.d
Serial No : D251AF

operations and shall be deemed to have allowed for this in his tender.

CLAUSE: 48 DEFAULT OF CONTRACTOR IN COMPLIANCE

In case of default on the part of the contractor in carrying out such instruction within the time specified therein or, if none, within a reasonable time, the Engineer shall be entitled to employ and pay other persons to carry out the same and all costs consequent thereon or incidental thereto shall, after due consultation with the Employer be determined by the Engineer and shall be recoverable from the contractor by the Employer/Engineer and may be deducted by the Employer from any moneys due or to become due to the contractor and the Engineer shall notify the contractor accordingly with a copy of the Employer.

CLAUSE: 49 BRIBES/COMMISSION

Any bribe/commission, gift or advantage given promised by or on behalf of the contractor or his partner, agent or servant or any one, on his or their behalf to any officer, servant, representative or agent of the Engineer or to any person on his behalf in relation to the obtaining or to the execution of this or any other contract with the Employer shall in addition to any criminal liability which he may incur, subject to the contractor to the cancellation of this and all other contracts with the Employer and also to the payment of any loss or damage resulting from any such cancellation. The Employer shall be entitled to deduct the amounts so payable from any money otherwise due to the contractor under this or any other contract Any Question or dispute as to the commission of any offense under the present Clause shall be settled in accordance with the law for the time being in force and applicable in India.

CLAUSE: 50 DRAWINGS AND PHOTOGRAPHS OF THE WORKS

The contractor shall not disclose of drawings furnished to him and works on which he is engaged without the prior approval of the Engineer in writing. No photograph of the works or any part thereof or plant employed thereon shall be taken or permitted by the contractor to be taken by any of his employees or any employees of his sub contractors without the prior approval of the Engineer in writing and no such photographs shall be published or otherwise circulated without the approval of the Engineer in writing.

Signature :-
Subject : CN=ASHWIN D, SERIALNUMBER=2035d4fe20bae89488f496e7d7fdab3e3fcc14
6a393f599e6d567e6c881eb03, ST=KARNATAKA, OID.2.5.4.17=560024, OU=
MANAGEMENT, O=NATIONAL SEEDS CORPORATION LTD, C=IN
User ID : ashwin.d
Serial No : D251AF

SAFETY CODE

Suitable scaffolds should be provided for workmen for all works that cannot safely be done from the ground or from solid construction except such short period work as can be done safely from ladders. When a ladder is used an extra 'Mazdoor' shall be engaged for holding the ladder and if the ladder is used for carrying materials as well suitable footholds and handholds shall be provided on the ladder and the ladder shall be given an inclination not steeper than 1/4 to 1 (1/4 horizontal and 1 vertical)

ii) Scaffolding or staging more than 3.6 m (12 feet) above the ground or floor, swung or suspended from an overhead support of erected with stationery support shall have a guard rail properly attached or bolted, braced and otherwise secured at least 90 cm (3 feet) high above the floor or platform of such scaffolding or staging and extending along with entire length of the outside and ends thereof with only such opening as may be necessary for the delivery of materials. Such scaffolding or staging shall be fastened as to prevent it from swaying from the building or structure.

iii) Working platform, gangways and stairways should be so constructed that they should not sag unduly or unequally and if the height of the platform or the gangway or the stairway is more than 3.6 m (12 feet) above ground level or floor level, they should be closely hoarded and should have adequate width land should be suitably fastened as described in (ii) above.

iv) Every opening in the floor of building or in a working platform shall be provided with suitable means to prevent the fall of persons or materials by providing suitably fencing or railing whose minimum height shall be 90 cm (3 feet).

v) Safe means of access shall be provided to all working platform and other working places. Every ladder shall be securely fixed. No portable single ladder shall be over 9m (30 feet) in length while the width between side rails rung ladder shall in no case be less than 29 cam (11-1/2") for ladder up to and including 3m (10 feet) in length. For longer ladders with width should be increased at least 1/4" for each additional 30cm (12") of length uniform step, spacing shall not exceeding 30cm (12"). Adequate precaution shall be taken to prevent danger from electrical equipment. No materials on any of the site of work shall be stacked or placed as to cause danger or inconvenience to any person or the public. The contractor shall provide all necessary fencing and lights to protect the public from accident, and shall be bound to bear the expenses of defence of every suit, action or other proceeding at law that may be brought by any person for injury sustained owing to neglect of the above precautions and to pay any damages and cost which may be awarded in any such suit, action proceedings to any such person or which may, with the consent of the contractor, be paid to compromise any claim by any such person.

vi) Excavation & Trenching. All trenches, 1.2 m (4 feet) or more in depth, shall at all times be supplied with at least one ladder for each 30m (100 feet) in length or fraction thereof ladder shall extend from bottom of the trench to at least 90 cm (3 feet) above the surface of the ground. The side of the trenches which are 1.5 m (5 feet) or more in depth shall be stepped back to give suitable slope or securely held by timber bracing, so as to avoid the danger of sides collapsing. The excavated materials shall not be placed within 1.5 m (5 feet) of the edges of the trench or half of the depth of trench whichever is more. Cutting shall be done from top to bottom. Under no circumstances undermining or undercutting shall be done.

vii) Demolition : Before demolition work is commenced and also during the process of the work:

a) All roads and open areas adjacent to the work site shall either be closed or suitably protected.

b) No electric cable or apparatus which is liable to be a source of danger over a cable or apparatus used by the operator shall remain electrically charged.

Verified
Subject: CN=ASHWIN D, SERIALNUMBER=2d33d4fe20b1e5948814906f7d7fdb3e3fcc14:6a393599e6d567e6c881eb03, ST=KARNATAKA, OID.2.5.4.17=560024, OU=.
Issuer: CN=eMudhra Sub CA for Class 2 Individual Pro, O=eMudhra Ltd, C=IN
Date: 2019.12.31 11:11:11 IST
User ID : ashwind
Serial No : D251AF

c) All practical steps shall be taken to prevent danger to persons employed from risk of fire or explosion or flooding. No floor, roof or other part of the building shall be so overloaded with debris or materials as to render it unsafe.

viii) All necessary personal safety equipment as considered adequate by the Engineer should be kept available for the use of the person employed on the site and maintained in a condition suitable for immediate use, and the contractor should take adequate steps to ensure proper use of equipment by those concerned:-

a) Workers employed on mixing asphalt materials, cement and lime mortars shall be provided with protective footwear and protective goggles.

b) Those engaged in white washing and mixing or stacking or cement bags or any materials which is injurious to the eyes shall be provided with protective goggles.
c) Those engaged in welding works shall be provided with welder's protective eye shields.

d) Stone breakers shall be provided with protective goggles and protective clothing and seated at sufficiently safe intervals.

e) When workers are employed in sewers and manholes, which are in active use, the contractor shall ensure that the manhole cover are opened and ventilated at least for an hour before the workers are allowed to get into the manholes, and the manholes so opened shall be cordoned off with suitable railing and provided with warning signals or boards to prevent accident to the public. In addition, the contractor shall ensure that the following safety measures are adhered to :-

ix (a) Entry for workers into the line shall not be allowed except under supervision of the Engineer or his authorized representative.

b) At least 5 to 6 manholes upstream and downstream should be kept open for at least 2 to 3 hours before any man is allowed to enter into the manhole for working inside.

c) Before entry presence of Toxic gases should be tested by inserting wet lead acetate paper which changes colour in the presence of such gases and give indication of their presence.

d) Presence of oxygen should be verified by lowering a doctor lamp into the manhole in case, no Oxygen is found inside the sewer line workers should be sent only with Oxygen Kit.

e) Safety belt with rope should be provided to the workers. While working inside the manholes such rope should be handled by two man standing outside to enable him to be pulled out during emergency.

f) The area should be barricaded or cordoned of by suitable means to avoid mishaps of any kind, proper warning signs should be displayed for the safety of the public whenever cleaning works undertaken during night or day.

g) No smoking or open flames shall be allowed near the blocked manhole being cleaned.

h) The malba obtained on account of cleaning of blocked manholes and sewer lines should be immediately removed to avoid accidents on account of slippery nature of the malba.

i) Workers should not be allowed to work inside the manhole continuously. He should be given rest intermittently. The Engineer may decide the time up to which a workers may be allowed to

Verified by:
Subject : CN=ASHWIN D, SERIALNUMBER=2d35d1fe20baeb9488f49687d7fdab3e3fc14
6a393f599e6d562e6c881eb03, ST=KARNATAKA, OID.2.5.4.17=560024, OU=
Department, O=INTERNATIONAL INSTITUTE OF, C=IN
User ID : ashwin.d
Serial No : D251AF

work continuously inside the manhole.

j) Gas masks with Oxygen Cylinder should be kept at site for use in emergency.

k) Air blowers should be used for flew of fresh air through the manholes. Whenever called for. Portable air blowers are recommended for ventilating the manholes. The Motors for these shall be vapour proof and of totally enclosed type. Non sparking gas engines also could be used but they should be placed at least 2 meters away from the opening and on the lowered side protected from wind so that they will not be source of friction on any inflammable gas that might by present.

l) The workers engaged for cleaning the manholes sewers should be properly trained before allowing to work in the manholes.

m) The workers shall be provided with Gum boots or non sparkling shoes bump helmets and gloves non sparkling tools safety lights and gas masks and portable air blowers (when necessary). They must be supplied with barrier cream for anointing the lamps before working inside the sewer lines.

n) Workmen descending a manhole shall try each ladder stop or rung carefully before putting his full weight on it to guard against insecure fastening due to corrosion of the rung fixed to manhole well.

o) If a man has received a physical injury he should be brought out by the sewer immediately and adequate medical aid should be provided to him.

p) The extent to which these precautions are to be taken depend on individual situation but the decision of the Engineer regarding the steps in this regard to be taken in an individual case will be final.

x) The contractor shall not employ men and women below the age of 18 years on the work of painting with products containing lead in any form. Wherever ,an above the age of 18 years are employed on the work of lead painting, the following precautions should be taken:

a) No paint containing lead or lead products shall be used except in the form of paste or ready made paint.

b) Suitable face masks should be supplied for use by the workers when paint is applied in the form of spray or a surface having lead paint dry rubbed and scraped.

c) Overalls shall be supplied by the contractor to the workmen and adequate facilities shall be provided to enable the working painters to wash during the cessation of work.

xi) An Additional clause (viii) (i) of NSC safety code in the contract shall not employ women and men below the age of 18 on the work of painting with product containing lead, in any form wherever men above the age of 18 are employed on the work of lead painting, the following principles must be observed for such use:

(a) White lead, sulphate of lead or product containing there pigment shall not be used in painting operation except in the form of pastes or paint ready for use.

(b) Measures shall be taken, wherever required in order to prevent danger arising from the application of paint in the form of spray.

(c) Measures shall be taken wherever required, to prevent danger arising out of from the application of a paint in the form of spray.

Subject: CN=ASHWIN D, SERIALNUMBER=2035d4fe20bae8948814496e7d7f1ab9e3fcc14?
6a393f599e6d567e6c881eb03, ST=KARNATAKA, OID.2.5.4.17=560024, OU=
MANAGEMENT TRAINEE, O=BEL, C=IN
Validity: [ ] to [ ]
UserID: ashwin.d
Serial No : D251AF

(d) Adequate facilities shall be provided to enable working painters to wash during and on cessation of work.

(e) Over all shall be worn by working painters during the whole of working period.

(f)) Suitable arrangement shall be made to prevent clothing put off during working hours being soiled by painting materials.

(g) Cases of lead poisoning and suspected lead poisoning shall be notified and shall be subsequently verified by medical man appointed by Competent Authority.

(h) Engineer may require when necessary medical examination of workers.

(i) Instructions with regard to special hygienic precautions to be taken in the painting trade shall be distributed to working painters.

xii) When the work is done near any place where there is risk of drowning, all necessary equipment should be provided and kept ready for use and all necessary steps taken for prompt rescue of any person in danger and adequate provision should be made for prompt first aid treatment of all injuries likely to be sustained during the course of the work.

xiii) Use of hoisting machines and tackle including their attachments, anchorage and supports shall conform to the following standards or conditions:

a. (i) These shall be of a good mechanical construction, sound materials and adequate strength and free from patent defects and shall be kept in good working order.

(ii) Every rope used in hoisting or lowering materials or as a means of suspension shall be durable quality and adequate strength, and free from patent defects.

b. Every crane driver or hoisting appliance operator shall be properly qualified and no person under the age of 21 years should be in charge of any hoisting machine including any scaffolding winch or give signal to operator.

c. In case of every hoisting machine and of every chain ring hook, shackle swivel and pulley block used in hoisting or as means of suspension the safe working load shall be ascertained by adequate means. Every hoisting machine and all gear referred to above shall be plainly marked with the safe working load each safe working load and the conditions under which it is applicable shall be clearly indicated. No part of any machine or any gear referred to above in this paragraph shall be loaded beyond the safe working load except, for the purpose of testing.

d. In case of departmental machines, the safe working load shall be notified by the Elect/. Engineer. As regards contractor's machine the contractor shall notify the safe working load of the machine to the Engineer whenever he brings any machinery to site of work and get it verified by the Electrical Engineer concerned.

xiv) Motors, gearing transmission, electric wiring and other dangerous parts of hoisting appliances should be provided with efficient safe guard. Hoisting appliances should be provided with such means as shall reduce to the minimum the risk of accidental descent of the load. Adequate precautions should be taken to reduce to the minimum the risk of any part of a suspended load becoming accidentally displayed. When workers employed on electrical installations which are already energized insulating mats, wearing apparel, such as gloves, sleeves and boots as may be necessary should be provided. The workers should not wear any rings, watches and carry keys or

Digitally signed by ASHWIN D
Date: 2021.04.17 10:31:24 IST
Reason: CN=ASHWIN D, SERIALNUMBER=20532f4fe20ba8594888e96e7d1dab3e3fcc24...
6a393f599e6d567e6c881eb03, ST=KARNATAKA, OID.2.5.4.17=560024, OU=...
Location: ...
User ID : ashwin.d
Serial No : D251AF

other materials which are the good conductors of electricity.

xv) All scaffolds, ladders and other safety devices mentioned or described herein shall be maintained in safe condition and no scaffold ladder or equipment shall be altered or removed while it is in use. Adequate washing facilities should be provided at near places of work.

xvi) These safety provision should be brought to the notice of all concerned by display on a notice board at a prominent place at work spot. The person responsible for compliance of the safety code shall be named therein by the contractor.

xvii) To ensure effective enforcement of the rules and regulations relating to safety precautions the arrangements made by the contractor shall be open to inspection by the Labour Officer, Engineer of the department or their representatives.

xviii) Notwithstanding the above clauses from (10 to xiv) there is nothing in these to exempt the contractor from the operations of any other Act or Rule in force in the Republic of India.

Signature :-
Subject : CN=ASHWIN D, SERIALNUMBER=2035d4fe20bae89488f496e7d7fdab3e3fcc14
6a393f599e6d567e6c881eb03, ST=KARNATAKA, OID.2.5.4.17=560024, OU=
MANAGEMENT, O=NATIONAL SEEDS CORPORATION LTD, C=IN
User ID : ashwin.d
Serial No : D251AF

MODEL RULES FOR THE PROTECTION OF HEALTH AND SANITARY ARRANGEMENTS FOR WORKERS EMPLOYED BY NATIONAL SEED CORPORATION OR ITS CONTRACTOR.

1. APPLICATION

These rules shall apply to all building and construction works in charge of National Seeds Corporation in which twenty or more workers are ordinarily employed or are proposed to be employed in any day during the period during which the contract work is in progress.

2. DEFINITION

Work place means a place where twenty or more workers are ordinarily employed or are proposed to be employed in connection with construction work on any day during the period during which the contract work is in progress.

3. FIRST AID FACILITIES

(A) At every work place there shall be provided and maintained so as to be easily accessible during working hours first aid boxes at the rate of not less than one box for 150 contract labour or part thereof ordinarily employed.

(B) The first aid box shall be distinctly marked with a red cross on white good and shall contain the following equipment namely"

a) For work places in which the number of contract labour employed does not exceed 50 -

i) 6 small sterilized dressings.

ii) 3 medium size sterilized dressings.

iii) 3 large size sterilized dressing.

iv) 3 large size sterilized burn dressings.

v) 1 (30 ml) bottle containing salvolatile having the dose and mode of administration indicated on the label.

vi) 1 (3o gms.) bottle of potassium permanganates crystals.

vii) 1 pair scissors.

viii) 1 copy of the first aid leaf let issued by the Director General, Factory Advice Service and Labour Institutes Government of India.

ix) 1 (30 ml) bottle containing a 2% alcoholic solution of Iodine.

x) 1 snake bite lancet.

xi) 1 bottle containing 100 tablets (each of 5 gms.) of aspirin.

xii) Ointment for burns.

xiii) A bottle of suitable surgical antiseptic solution.

Signature :-
Subject : CN=ASHWIN D, SERIALNUMBER=2035d4fe20bae89488f496e7d7fdab3e3fcc14:
MANAGEMENT, O=NATIONAL SEEDS CORPORATION LTD, C=IN
User ID : ashwin.d
Serial No : D251AF

b) For work places in which the number of contract is labour exceed 50 -

Each first aid box shall contain the following equipment :-

i) 12 small sterilised dressings.
ii) 6 medium size sterilised dressings.
iii) 6 large size sterilised dressings.
iv) 6 large size sterilised burn dressings.
v) 6 (15 gms.) packets sterilised cotton wool.
vi) 1 (60 ml) bottle containing a two percent alcoholic solution iodine.
vii) 1 (60 ml) bottle containing salvolatile having the dose and mode of administration indicated on the label.
viii) 1 roll of adhesive plaster.
ix) 1 snake bite lancet.
x) 1 (3o gms.) bottle of potassium permanganate crystals.
xi) 1 pair scissors.
xii) 1 copy of the first air leaf let issued by the Director General, Factory Advice Service and Labour Institutes, Government of India.
xiii) A bottle containing 100 tables (each of 5 gms.) of aspirin.
xiv) Ointment for burns.
xv) Aottle of suitable surgical antiseptic solution.

C) Adequate arrangements shall be made for immediate recoupment of the equipment when necessary.

D) Nothing except the prescribed contents shall be kept in the First Aid Box.

E) The first aid box shall be kept in charge of responsible person who shall always be readily available during the working hours of the work place.

F) A person-in-charge of the First Aid Box shall be a person trained in First Aid treatment, in work place where the number of contract labour employed is 150 or more.

G) In work places where the No. of contract labour employed is 500 or more and hospital facilities are not available within easy distance of the works, First Aid posts shall be established and run by a trained compounder. The compounder shall be on duty and shall be available at all hours when the workers are at work.

H) Where work places are situated in places which are not towns or cities, a suitable motor transport shall be kept readily available to carry injured person or persons suddenly taken ill to the nearest hospital.

4. DRINKING WATER

a) In every work place, there shall be provided and maintained at suitable places, easily accessible to labour a sufficient supply of cold water fit for drinking.

b) Where drinking water is obtained from an intermittent public water supply, each work place shall be provided with storage where such drinking water shall be stored.

c) Every water supply of storage shall be at a distance of not less than 50 feet from any latrine drain or other source of pollution. Where water has to be drawn from the existing well which

Signature
Subject: CN=ASHWIN D, SERIALNUMBER=2d5d4fe20baeb94888e6e7b7f0b03e3fcc14,
6a393f599e6d567e6c881eb03, ST=KARNATAKA, OID.2.5.4.17=560024, OU=
Date: 2019.07.17 16:55:08 IST
User ID: ashwind
Serial No : D251AF

is within such proximity of latrine, drain or any other source of pollution, the well shall be properly chlorinated before water is drawn from it for drinking. All such wells shall be entirely closed in and be provided with a trap door which shall be dust and water proof.

d) A reliable pump shall be fitted to each covered well, the top door shall be kept locked and opened only for cleaning or inspection which shall be done at least once a month.

5. WASHING FACILITIES

i) In every work place adequate and suitable facilities for washing shall be provided and maintained for the use of contract labour employed therein.

ii) Separate and adequate cleaning facilities shall be provided for the use of male and female workers.

iii) Such facilities shall be conveniently accessible and shall be kept in clean and hygienic condition.

6. LATRINES AND URINALS

A (i) Latrines shall be provided in every work place on the following scale namely:-

(ii) Where female are employed there shall be at least one latrine, for every 25 females.

B (i) Where males are employed, there shall be at least one latrine, for every 25 males provided that where the number of males or females exceeds 100, it shall be sufficient if there is one latrine for 25 males or females as the case may be, upto the first 100, and one for every 50 thereafter.

ii) Every latrine shall be under cover & so partitioned off fastening as to secure privacy, and shall have a proper door and fastenings.

iii) Construction of latrines: The inside walls shall be constructed of masonry or some suitable heat resisting non absorbent materials and shall be cement washed inside and outside at least once a year. Latrines shall not be of a standard lower than bore hole system.

iv) (1) Where workers of both sexes are employed, there shall be displayed outside each block of latrine and urinal, a notice in the language understood by the majority of the workers 'FOR MEN ONLY' or 'FOR WOMEN ONLY' as the case may be.

(2) The notice shall bear the figure of a man or of a woman as the case may be.

v) There shall be at least one urinal for male workers up to 50 and one for female workers up to fifty employed at a time, provided that where the number of male or female workmen, as the case may be exceeds 500, it shall be sufficient if there is one urinal for every 50 males or females up to the first 500 and one for every 100 of per thereafter.

vi) a) The latrines and urinals shall be adequately lighted and shall be maintained in a clean land sanitary condition at all times.

b) Latrines and urinals other than those connected with a flush sewerage system shall comply with the requirements and urinals of the Public Health Authorities.

Digitally signed by
SUBJECT : CN=ASHWIN D, SERIALNUMBER=2d39d4fe20bda6954881f4968707fddb3183fc14, 6a393f599e6d567e6c881eb03, ST=KARNATAKA, OID.2.5.4.17=560024, OU=MANAGEMENT, O=NATIONAL SEEDS CORPORATION LTD, C=IN
User ID : ashwin.d
Serial No : D251AF

vii) Water shall be provided by means of a tap or otherwise so as to be conveniently accessible in or near the latrines and urinals.

viii) Disposal of excreta: Unless otherwise arranged for by the local sanitary authority, arrangements for proper disposal of excreta by incineration at the work place shall be made by means of a suitable incinerator. Alternately excreta may be disposed of by putting a layer of night soil at the bottom of a pucca tank prepared for the purpose and covering it with a 15 cm layer of waste or refuse and then covering it with a layer of earth for a fortnight (when it will turn to manure).

ix) The contractor shall at his own expense, carry out all instructions issued to him by the Engineer to effect proper disposal of soil and other conservancy work in respect of the contractor's workmen or employees on the site. The contractor shall be responsible for payment of any charges which may be levied by Municipal or Cantonment Authority for execution of such work on his behalf.

7. PROVISION OF SHELTER DURING REST

At every place shall be provided, free of cost, four suitable sheds, two for meals and the other two for rest separately for the use of men and women labour. The height of each shelter shall not be less than 3 metres from the floor level to the lowest part of the roof. These shall be kept clean and the space provided shall be on the basis of 0.6 sqm. per head.

Provided that the Engineer may permit subject to his satisfaction, a portion of the building under construction of other alternative accommodation to be used for the purpose.

8. CRECHES

a) At every work place, at which 20 or more women are ordinarily employed, there shall be provided two room of reasonable dimensions for the use of their children under the age of six years. One room shall be used as a play rooms for the children and the other as their bed room. The rooms shall be constructed, with specifications similar to those given in Clause 19-H.

b) The rooms shall be provided with suitable and sufficient openings for light and ventilation. There shall be adequate provision of sweepers to keep the place clean.

c) The contractor shall supply adequate number of toys and games in the play room and sufficient number of cots ad bedding in the bed room.

d) The contractor shall provide one ayaa to look after the children in the crech when the number of women workers does not exceed 50 and two ayaa when the number of women workers exceed fifty.

9. CANTEEN

a. In every work place where the work regarding the employment of contract labour is likely to continue for six months and wherein contract labour numbering one hundred or more are ordinarily employed on adequate canteen shall be provided by the contractor for the use of such contract labour.
b. The canteen shall be maintained by the contractor in an efficient manner.

c. The canteen shall consist of at least dining hall, kitchen store room, pantry and washing places separately for workers and utensils.

d. The canteen shall be sufficiently lighted at all times when any person has access to it.

Signature :-
Subject : CN=ASHWIN D, SERIALNUMBER=2035d4fe20bae89488f496e7d7fdab3e3fcc14:
6a393f599e6d567e6c881eb03, ST=KARNATAKA, OID.2.5.4.17=560024, OU=
MANAGEMENT, O=NATIONAL ESERS CORPORATION, CN=C-NO
User ID : ashwin.d
Serial No : D251AF

e. The floor shall be made of smooth and impervious material and inside walls shall be lime washed or colour washed at least once in each year. Provided that the inside walls of the kitchen shall be lime washed every four months.

f. The premises of the canteen shall be maintained in a clean and sanitary condition.

g. Waste water shall be carried away in suitable covered drains and shall not be allowed to accumulate so as to cause a nuisance.

h. Suitable arrangements shall be made for the collection and disposal of garbage.

i. The dining hall shall accommodate at a time 30 percent of contract labour working at a time.

j. The floor area of the dinning hall, excluding the area occupied by the service counter and any furniture except tables and chairs shall not be less than one square meter (10 sqft.) per diner to be accommodated as prescribed in sub Rule 9.

k. (i) A portion of the dining hall and service counter shall be partitioned off and reserved for women workers in proportion to their number.

(ii) Washing places for woman shall be separate and screened to secure privacy.

l. Sufficient table stools, chair or benches shall be available for the number of diners to be accomodate as prescribed in sub Rule 9.

m) (i) There shall be provided and maintained sufficient utensils, crockery, furniture and any other equipments necessary for the efficient running of the canteen.

(ii) The furniture utensils and other equipments shall be maintained in a clean and hygienic condition.

(iii) Suitable clean clothes for the employees serving in the canteen shall be provided and maintained.

(iv) A service counter, if provided, shall have top or smooth and imprevious material.

(v) Suitable facilities including an adequate supply of hot water shall be provided for the cleaning of utensils and equipments.

n). The food stuffs and other items to be served in the canteen shall be in conformity with the normal habits of the contract labour.

o) The charges for food stuffs, beverages and any other items served in the canteen shall be based on 'No profit No loss' and shall be conspicuously display in the canteen.

p) In arriving at the price of the food stuffs, and other articles served in the canteen, the following items shall not be taken into consideration as expenditure namely :-

i) The rent of land and building.

ii) The depreciatio and maintenance charges for the building and equipment provided for the canteen.

iii) The cost of purchase, repairs and replacement of equipment including furniture, crockery, cutlery and utensils.

iv) The water charges and other charges incurred for lighting and ventilation.

v) The interst and amount spent on the provision land maintenance and equipment provided for in the canteen.

q. The accounts pertaining to the canteen shall be audited once every 12 months by registered

Signature :-
Subject : CN=ASHWIN D, SERIALNUMBER=2035d4fe20bae89488f496e7d7fdab3e3fcc14
6a393f599e6d567e6c881eb03, ST=KARNATAKA, OID.2.5.4.17=560024, OU=
MANAGEMENT, O=NATIONAL SEEDS CORPORATION LTD, C=IN
Serial No : D251AF

accountants and auditors.

10. ANTI MALARIAL PRECAUTIONS

The contractor shall at his own expense, conform to all anti-malarial instructions given to him by the Engineer including the filing up of any borrow pits which may have been dug by him.

11. The above rules shall be incorporated in the contract and in notices inviting tenders and shall from an integral part of the contracts.

12. AMENDMENTS

Employer may from time to time, add to or amend these rules and issue such directions as it may consider necessary for the purpose of removing any difficulty which may arise in the administration thereof.

Signature :-
Subject : CN=ASHWIN D, SERIALNUMBER=2035d4fe20bae89488f496e7d7fdab3e3fcc14
6a393f599e6d567e6c881eb03, ST=KARNATAKA, OID.2.5.4.17=560024, OU=
MANAGEMENT, O=NATIONAL SEEDS CORPORATION LTD, C=IN
User ID : ashwin.d
Serial No : D251AF

CONTRACTOR LABOUR REGULATION

SHORT TITLE

1. These regulations may be called the National Seeds Corporation Ltd., Contractor Labour Regulations.

2. DEFINITIONS:-

i) 'Workman' means any person employed by NSC or its contractor directly or indirectly through a sub-contractor with or without the knowledge of the National Seeds Corporation to do any skilled, semi-skilled or unskilled manual supervisory, technical or electrical work for hire or reward whether the terms of employment are expressed or implied but does not include any person:

a) Who is employed mainly in a managerial or administrative capacity : or

b) Who, being employed in a supervisory capacity drawn wages exceeding five hundred rupees per mensem for exercised either by the nature of the duties attached to the office or by reason of powers vested in him, functions mainly of managerial nature.

c) Who is an out worker, that is to say a person to whom, any articles or materials are given out by or on behalf of the principal employer to be made up, cleaned, washed, altered, ornamental finished, repaired, adopted or otherwise processed for sale for the purpose of the trade or business of the principal employer and the process is to be carried out either in the home of the out worker or in some other premises, not principal employer.

ii) Fair Wages shall include every person who undertake whether for time or piece work fixed & notified under the provisions of the Minimum Wages Act from time to time.

iii) 'Contractors' shall include every person who undertake to produce a given result other than a more supply of goods or articles of manufacture through contract labour or who supplied contract labour for any work and includes a sub-contractor.

iv) 'Wages' shall have the same meaning as defined in the payment of Wages Act.

3. a) Normally working hours of an adult employee should not exceed 9 hours a day & in case of child 4-1/2 hours a day. The working day shall be so arranged that inclusive of interval for rest, if any, it shall not spread over more than 12 hours on one day.

b) When an adult worker is made to work for more than 9 hours on any day or for more than 48 hours in any week he shall be paid overtime for the extra hours put in by him at double the ordinary rate of wages. Children shall not be made to work extra hours.

c) i) Every worker shall be given a weekly holiday normally on a Sunday in accordance with the provisions of the minimum wages (Central) Rules 1960 as amended from time to time irrespective of whether such worker is governed by the Minimum Wages Act or not.

ii) Where the Minimum wages prescribed by the National Seeds Corporation under the Minimum Wages Act are not inclusive of the Wages for the weekly day of rest, the worker shall be entitled to rest day wages at the rate applicable to the next proceeding day, provided he had worked under the same contractor for a continuous period of not less than 6 days.

iii) Where a contractor is permitted by the Engineer to allow a worker to work on a normal weekly holiday, he shall grant a substituted holiday to him for the whole day on one of the five days immediately before or after the normal weekly holiday and pay wages to such worker for the work performed on the normal weekly holiday at overtime rate.

4. DISPLAY OF NOTICE REGARDING WAGES ETC.

The contractor shall before be commences his work on contract, display and correctly maintain and continue to display and correctly maintain in a clean and legible condition in conspicuous places on the work, notices in English and in the local Indian Languages spoken by the majority of the workers, giving the minimum rates of wages fixed under the Minimum Wages Act, the actual wages being paid, the hours of work for which such wages are earned, wage periods, date of payments of wages and other relevant informations as per Appendix 'A'.

5. PAYMENT OF WAGES

i) The contractor shall fix wage period in respect of which wages shall be payable.

Signature
Certificate Authority, Serial Number: 2c9fa6ca0f7d7ad1, CN=6a393f599e6d567e6c881eb03, ST=KARNATAKA, OID.2.5.4.17=560024, OU=MANAGEMENT, O=NATIONAL SEEDS CORPORATION LTD, C=IN
User ID : ashwin.d
Serial No : D251AF

ii) No wage period shall exceed one month.

iii) The wages of every person employed as contract labour in an establishment or by a contractor where less than one thousand, such persons are employed shall be paid before the expiry of seventh day and in other cases before the expiry of tenth day after the last day of the wage period in respect of which the wages are payable.

iv) Where the employment of any worker is terminated by or on behalf of the contractor the wages earned by him shall be paid before the expiry of the second working day from the date on which his employment is terminated.

v) All payments of wages shall be made on a working day at the work premises and during the working time and on a date notified in advance and in case the
work is completed before the expiry of the wage period, final payment shall be made within 48 hours of the last working day.

vi) Wages due to every worker shall be paid to him direct or to other person authorized by him in this behalf.

vii) All wages shall be paid in current coin or currency or in both.

viii) Wages shall be paid without any deductions of any kind except those specified by the National Seeds Corporation by general or special order in this behalf of permissible under the payment of wages Act, 1956.

ix) A notice showing the wages period and the place and time of disbursement of wages shall be displayed at the place of work and a copy sent by the contractor to the Engineer under acknowledgment.

x) It shall be the duty of the contractor to ensure the disburse of wages in the presence of the Engineer or any other authorized representative of the Engineer who will be required to be present at place and time of disbursement of wages by the contractor to workman.

xi) The contractor shall obtain from the Engineer or any other authorized representative of the Engineer as the case may be, a certificate, under his signature at end of the entries in the "Register of Wages" or the "Wages-cum-Muster Roll" as the case may be in the following form:-

"Certified that the amount shown in Column No.
_____ has been paid
to the workman concerned in my presence on

_____

6. FINES & DEDUCTIONS WHICH MAY BE MADE FROM WAGES

i) The wages of a worker shall be paid to him without any deductions of any kind except the following"

a. Fines

b. Deductions for absence from duty i.e. from the place or the places where by the terms of his employment he is required work. The amount of deduction shall be in proportion to the period for which he was absent.

c. Deduction for damage to or loss of goods expressly entrusted to the employed person for custody, or for loss of money or any other deduction which he is required to account, where such damage or loss is directly attributable to his neglect or default.

d. Deduction for recovery of advances or for adjustment of over-payment of wage advances granted shall be entered in a register.

e. i) Any other deduction which the National Seeds Corporation may from time to time allow.

ii) No fines should be imposed on any worker save in respect of such acts and omissions on his part as have been approved of any the Chief Labour Commissioner.

NOTE :

An approved list of Acts and Omissions for which fines can be imposed is enclosed as Appendix -

iii) No fine shall be imposed on any worker and no deduction for damage or loss shall be

Signature :-
Subject : CN=ASHWIN D, SERIALNUMBER=2035d4fe20bae89488f496e7d7fdab3e3fcc14
6a393f599e6d567e6c881eb03, ST=KARNATAKA, OID.2.5.4.17=560024, OU=
MANAGEMENT, O=NATIONAL SEEDS CORPORATION LTD, C=IN
User Id : ashwind
Serial No : D251AF

made from his wage until the worker has been given an opportunity of showing cause against such fines or deductions.

iv) The total amount of fine which may be imposed in any wage period on a worker shall not exceed an amount equal to three paise in a rupee of the total wages, payable to him in respect of that wage period.

v) No fine imposed on any worker shall be recovered from him by installment, or after the expiry of sixty days from the date on which it was imposed.

vi) Every fine shall be deemed to have been imposed on the day of the act of omission in respect of which it was imposed.

7. LABOUR RECORDS

i) The contractor shall maintain a "Register of persons Employed" on work on contract in Form XIII of the CL (R&A) Central Rules 1971 (Appendix - IV)

ii) The contractor shall maintain a 'Muster Roll' Register in respect of all workmen employed by him on the work under contractor in Form XVI of the CL (R&A) Rules 1971 (Appendix - V).

iii) The Contractor shall maintain a wage register in respect of all workmen employed by him on the work under Contract in Form XVII of the CL (R&A) Rules 1971 (Appendix V).

iv) Register of Accidents: "The contractor shall maintain a register of accidents in such form as may be convenient at the work placed but the same shall include the following particulars".

a) Full particulars of the labourers who met with accident.
b) Rate of wages.
c) Sex.
d) Age.
e) Nature of accident and cause of accident.
f) Time and date of accident.
g) Date & time when admitted in Hospital.
h) Date of discharge from the Hospital.
i) Period of treatment and result of treatment.
j) Percentage of loss of earning capacity and disability as assessed by Medical Officer.
k) Claim required to be paid under Workmen's Compensation Act.
l) Date of payment of compensation.
m) Amount paid with details of the person to whom the same was paid.
n) Authority by whom the compensation was assessed.
o) Remarks.
p) Register of Fines Contractor shall maintain a "Register of Fines" in the form XXII of C1 (R&A) Rules 1971 (Appendix - XII).

The contractor shall display in a good condition and in a conspicuous place of work the approved list of Acts and Omissions for which fines can be imposed (Appendix - X).

vi) Register of Deductions: The contractor shall maintain a Register of deductions for damage or loss in form XX of the CL (R&A) Rules 1971 (Appendix - XII)

vii) Register of Advance: The contractor shall maintain a 'Register of Advances' in form XXII of the CL (R&A) Rules 1971 (Appendix XIII).

viii) Register of overtime: The contractor shall maintain a Register of Overtime in Form XXXIII of the CL (R&A) Rules 1971 (Appendix XIV) .

8. ATTENDANCE CARD-CUM-WAGE SLIP

i) The contractor shall issue an attendance Card-cum-Wage slip to each workmen employed by him in the specimen form at (Appendix VII).

ii) The card shall be valid for each wage period.

iii) The contractor shall mark the attendance of each workmen on the card twice eacgh day, once at the commencement of the day and again after the rest interval, before the actually starts work.

The card shall remain in possession of the worker during the wage period under reference.

v) The contractor shall complete the wage slip portion on the reverse of the card at least a day prior

Signature Not Verified
Digitally signed by [illegible]
6a393f599e6d567e6c8818b03, ST=KARNATAKA, OID.2.5.4.17=560024, OU=
MANAGEMENT, O=NATIONAL SEEDS CORPORATION LTD, C=IN
Serial No : D251AF

to the disbursement of wages in respect of the wage period under reference.

vi) The contractor shall obtain the signature or thumb impression of the worker on the wage slip at the time of disbursement of wages and retain the card with himself.

9. EMPLOYMENT CARD ;

The contractor shall issue an Employment Card in Form XIV of the CL(R&A) Central Rules 1971 to each worker within three days of the employment of the worker (Appendix-VIII).

10. SERVICE CERTIFICATE:

On termination of employment for any reason whatsoever, the contractor shall issue to the workman whose services have been terminated, a service certificate in Form XV of the CL(R&A) Central Rules, 1971 (Appendix-IX).

11. PRESERVATION OF LABOUR RECORDS

All records required to be maintained under regulations Nos. 6 & 7 shall be preserved in original for a period of three years from the date of last entries made available for inspection by the Engineer or Labour Officer or any other officers authorized by the Department of works and Housing in this behalf.

12. POWER OF LABOUR OFFICER TO MAKE INVESTIGATIONS OR ENQUIRY

The Labour Officer or any other person authorized by National Seeds Corporation on their behalf shall have power to make inquiries with a view to ascertaining and enforcing due and proper observance of the Fair Wage Clauses and the Provision of Regulations. He shall investigate into any complaint regarding the default made by the Contractor or sub-contractor in regard to such provisions.

The labour officer or other person authorized as fore said shall submit a report of result of his investigations or inquiry to the Engineer concerned indicating the extent, if any, to which the default has been committed with a note that necessary deductions from the contractor's bill be made and the wages and other dues be paid to the labourers concerned. In case an appeal is made by the contractor under Clause of these regulations, actual payment to labourers will be made by the Engineer after the Superintending Engineer has given his decision on such appeal.

The Engineer shall arrange payments to the Labour concerned within 45 days from the receipt of the report from the Labour Officer or the Superintending Engineer as the case may be.

13. REPORT OF LABOUR OFFICER

The Labour Officer or other persons authorized as aforesaid shall submit a report of result of his investigation or enquiry to the Engineer concerned indicating the extent, if any, to which the default has been committed with a note that necessary deductions from the contractor"s bill be made and the wages and other dues to paid to the labourers concerned. In case any appeal is made by the contractor under clause 13 of these regulations, actual payment to labourers will be made by the Engineer after the Superintending Engineer has given his decision on such appeal.

The Engineer shall arrange payments to the labour concerned within 45 days from the receipt of the report from the Labour Officer or the Superintending Engineer as the case may be.

14. APPEAL AGAINST THE DECISION OF LABOUR OFFICER

Any person agreed by the decision and recommendation of the Labour Officer or other person so authorized may appeal such decision to the Engineer concerned within 30 days from the date of decision, forwarding simultaneously a copy of his appeal to the Superintending Engineer concerned but subject to such appeal, the decision of the Officer shall be final and binding upon the contractor.

15. PROHIBITION REGARDING REPRESENTATION THROUGH LAWYER

i) A workman shall be entitled to be represented in any investigation or an enquiry under these regulations by :-

a) An Officer of a registered trade union or which he is a member.

b) An Officer or a federation of trade unions referred to in clause (a) is affiliated.

c) Where the employer is not a member of any registered trade union, by an officer of a registered trade union, connected with, the industry in which the worker is employed.

ii) An employer shall be entitled to be represented in any investigation or enquiry under these

Signature ...
Subject : CN=ASHWIN D, SERIALNUMBER=2035d4fe20bae89488f496e7d7fdab3e3fcc14:
Issuer : CN=(n) Class 2 CA, O=(n) Limited, C=IN
User ID : ashwin.d
Serial No : D251AF

regulations by :-

a) An Officer of an association of employers of which he is a member.

b) An Officer of federation of associations of employers to which association referred to in clause (A) is affiliated.

c) Where the employer is not a member of any association of employers by an officer of association of employer, connected with industry or by any other employer, engaged in the industry in which the employer is engaged.

iii) No party shall be entitled to be represented by a legal partitioner in any investigation or enquiry under these regulations.

16. INSPECTIONS OF BOOKS AND SLIPS

The contractor shall allow inspection of all the prescribed labour recorded to any of his workers to his agent at a convenient time and place after due notice is received or to the Labour Officer or any other person, authorized by the National Seeds Corporation on his behalf.

17. SUBMISSION OF RETURNS

The contractor shall submit periodical returns as may be specified from time to time.

18. AMENDMENTS

The National Seeds Corporation may from time to time and to or amend the regulations and on any question as to the application, interpretation or effect of those regulations the decision of the Engineer concerned in this behalf shall be final.

Signature :-
Subject : CN=ASHWIN D, SERIALNUMBER=2035d4fe20bae89488f496e7d7fdab3e3fcc14
6a393f599e6d567e6c881eb03, ST=KARNATAKA, OID.2.5.4.17=560024, OU=
MANAGEMENT, O=NATIONAL SEEDS CORPORATION LTD, C=IN
User ID : ashwin.d
Serial No : D251AF

LIST OF PROFORMA FOR REGISTERS (Appendix- I to XIII)

1	Appendix-I	Register of maternity benefits.
2	Appendix-ii	Maternity benefit admissible to the Contractor's in National Seeds Corporation Limited.
3	Appendix-iii	Labour Board
4	Appendix-iv	Register of workman employed by Contractor
5	Appendix-v	Muster Roll
6	Appendix-vi	Register of wage
7	Appendix-vii	Wage Card & Wages slip
8	Appendix-viii	Employment Card
9	Appendix-ix	Service certificate
10	Appendix--x	Register of fines
11	Appendix-xi	Register of deduction for damage or loss
12	Appendix-xii	Register of advance.
13	Appendix-xiii	Register of over time.

Signature :-
Subject : CN=ASHWIN D, SERIALNUMBER=2035d4fe20bae89488f496e7d7fdab3e3fcc14
6a393f599e6d567e6c881eb03, ST=KARNATAKA, OID.2.5.4.17=560024, OU=
MANAGEMENT, O=NATIONAL SEEDS CORPORATION LTD, C=IN
User ID : ashwin.d
Serial No : D251AF

LIST OF ACTS AND OMISSIONS FOR WHICH FINES CAN BE IMPOSED

In accordance with rule 7(v) of the NSC Contractor's Labour Regulations to be displayed prominently at the site of work both in English & local language.

1) Willful insubordination or disobedience, whether alone or in combination with other.
2) Theft fraud or dishonesty in connection with the contractors beside a business or property of NSC.
3) Taking or giving bribes or any illegal gratification's.
4) Habitual late attendance.
5) Drunkenness, fighting, riotous or disorderly or indifferent behavior.
6) Habitual negligence.
7) Smoking near or around the area where combustible or other materials are locked
8) Habitual in-discipline.
9) Causing damage to work in the progress or to property of the NSC or of the contractor
10) Sleeping on duty
11) Malingering or slowing down work.
12) Giving of false information regarding name, age, father's name etc.
13) Habitual loss of wage cards supplied by the employers.
14) Unauthorized use of employer's property of manufacturing or making of unauthorized particle at the work place.
15) Bad workmanship in construction and maintenance by skilled workers which is not approved by the department and for which the contractors are compelled to undertake rectifications.
16) Making false complaints and /or misleading statements.
17) Engaging on trade within the premises of the establishments.
18) Any unauthorized divulgence of business affairs of the employees
19) Collection or canvassing for the collection of any money within the premises of an establishment unless authorized by the employer.
20) Holding meeting inside the premises without prior sanction of the employer.
21) Threatening or intimidating any workman or employer during the working hours within the premises.

Signature :-
Subject : CN=ASHWIN D, SERIALNUMBER=2035d4fe20bae89488f496e7d7fdab3e3fcc14:
6a393f599e6d567e6c881eb03, ST=KARNATAKA, OID.2.5.4.17=560024, OU=
MANAGEMENT, O=NATIONAL SEEDS CORPORATION LTD, C=IN
User ID : ashwin.d
Serial No : D251AF

SECTION-IV

PROFORMA OF SCHEDULE

SCHEDULE 'A':- Schedule of quantities (as per Annex-3)

SCHEDULE 'B' :- Schedule of materials to be issued to the Contractor cement.

SN	Description of item	Qty.	Rate in figures and works at which the material will be charged to the contractor	Place of issue
1	OPC-43 Grade Cement	full	----------	FOR Destination (at work site)

SCHEDULE ' C':- Tools and plants to be hired to the Contractor.

SN	**Description**	**Hire charges/day**	**Place of issue**
1	2	3	4

SCHEDULE 'D':-Extra schedule for specific requirement/documents for the work, if any

SCHEDULE ' E':- Reference to general conditions of contract**:-**
Name of work :- ----------
Estimated cost of work:- Rs.---------
Earnest money :- Rs. ----------
Performance Guarantee: - 5 % of accepted value
Security Deposit:- 5 % value of work done.

CLAUSE 10.5 :- Schedule of basic rate of Materials, Labour and POL etc. at FOR .

Components of materials: - Expressed as per cent of total value of work:- 55 % .

Component of Labour :- Expressed as per cent of total value of work:- 25 %

Component of P.O.L.:- Expressed as per cent of total value of work:- 5 % .

CLAUSE-1 Furnishing Performance Guarantee :- 5 % of accepted value

Signature :-
Subject : CN=ASHWIN D, SERIALNUMBER=2035d4fe20bae89488f496e7d7fdab3e3fcc14
6a393f599e6d567e6c881eb03, ST=KARNATAKA, OID.2.5.4.17=560024, OU=
MANAGEMENT, O=NATIONAL SEEDS CORPORATION LTD, C=IN
User ID : ashwin.d
Serial No : D251AF

CLAUSE-1-A Recovery of security deposit :- 5 % value of work done subject to a maximum of Rs. 5.00 lakhs

CLAUSE-2 Authority of fixing compensation under clause-2:-_____

CLAUSE-5 Time allowed for execution of work. Authority to give fair and reasonable extension of time for completion _____

CLAUSE-7 Gross work to be done together with net Payment/adjustment of advances for materials collected, if any, since the last such payment for being eligible to interim payment. _____

CLAUSE-11 Specifications to be followed for execution of work _____

CLAUSE-12 Deviations/variations extent & pricing

12,1(ii) Schedule of rates for determining rates for additional, altered or substituted items that can not be determined under 12.1 _____

12.1(iii) Plus/minus the % over the rate entered in the schedule of rates _____

12.1(iv) A Deviation limit beyond which sub clauses (i) to (iii) shall not apply and clauses 12.2 & 12.3 shall apply. _____

12.1 (iv) B (a) Limit for value of any item of any individual trade beyond which sub-clauses (i) to (v) shall not apply and clauses 12.2 & 12.3 shall apply _____

CLAUSE-16 Competent authority for _____

Signature :-
Subject : CN=ASHWIN D, SERIALNUMBER=2035d4fe20bae89488f496e7d7fdab3e3fcc14:
6a393f599e6d567e6c881eb03, ST=KARNATAKA, OID.2.5.4.17=560024, OU=
MANAGEMENT, O=NATIONAL DEPOSITORY FOR, C=IN
User ID : ashwind
Serial No : D251AF

deciding reduced rates ._____

CLAUSE-35

Minimum qualifications and experienced required for Principal Technical Representative.

a) For works with estimated cost put to tender more than.
   i) Rs 10 lakhs for civil work — Graduate or retired Engineer
   ii) Rs 5 lakhs for Elect./Mech. Works — possessing at least recognized diploma.

b) For works with estimated cost put to tender

   More than 5 lakhs but less than Rs 10 lakhs for civil work. More than Rs 1 lakhs but less than Rs 5 lakhs for Elect./Mech. Works — Recognized diploma holder

c) Discipline to which Principal Technical Representative should belong — Civil/Elect./Mech.

d) Minimum experience of works ----------years.

e) Recovery to be affected from for the contractor in the event of not fulfilling Provision of clause 36 (i) — Rs. 15,000/-p.m. for Graduate Rs 10,000/-p.m. for diploma holder.

CLAUSE-42

i) Schedule/ statement for determining theoretical of cement & bitumen on the basis of Delhi-Schedule of Rates

ii) Variations permissible on theoretical quantity.

a) (i) Cement for works with estimated cost put to Tender not more than Rs, 5 lakhs — 5 % plus/minus
   (ii) Works with estimated cost put to tender more than Rs. 5 lakhs — 3 % plus/minus

b) Bitumen all works — 2.5% plus only & nil - on minus side.

c) Steel reinforcement and structural steel Sections for each diameter, section and category — 3% plus/minus

d) All other materials — Nil

RECOVERY RATES FOR QUANTITIES BEYOND PERMISSIBLE VARIATION

Signature :-
Subject : CN=ASHWIN D, SERIALNUMBER=2035d4fe20bae89488f496e7d7fdab3e3fcc14:
6a393f599e6d567e6c881eb03, ST=KARNATAKA, OID.2.5.4.17=560024, OU=
MANAGEMENT, O=NATIONAL SEEDS CORPORATION LTD, C=IN
User ID : ashwin.d
Serial No : D251AF

SN 1	Description of item	Rate in figures and words at which recovery shall be made form the contractor. Excess beyond Permissible variation	Less use beyond the permissible variation
1	Cement	Double the rate quoted in schedule ' E '.	
2	Steel reinforcement	-----do------	
3	Structural Sections	-----do------	

SCHEDULE 'F'

Reference to general rules & guidance for inviting of tender:-

Name of work: _____
Estimated cost of work : Rs. _____
Earnest money : Rs._____
Performance Guarantee 5 % of accepted value.
Security deposit: 5 % value of work done subject to a maximum of Rs. 5 lakhs .

Clause 1:-

i) Time allowed for submission of performance guarantee. from the date of issue of letter of acceptance. :- 15 days

ii) Maximum allowable extension beyond the period provided in (i) above:- 10 days.

Clause:- 5

Number of days from the date of issue of letter of acceptance for reckoning date of start 15 days mile stone as per table given below:-

Signature :-
Subject : CN=ASHWIN D, SERIALNUMBER=2035d4fe20bae89488f496e7d7fdab3e3fcc14
6a393f599e6d567e6c881eb03, ST=KARNATAKA, OID.2.5.4.17=560024, OU=
MANAGEMENT, O=NATIONAL SEEDS CORPORATION LTD, C=IN
User ID : ashwin.d
Serial No : D251AF

Table of Mile stone

SN	Description of milestone (physical)	Time allowed in days (from date of start)	Amount to be with-held in case of non achievement of milestone
1	2	3	4

Time allowed for execution of work:- _____

Authority to decide:

i) Extension of time _____
ii) Rescheduling of milestone ----------

GENERAL RULES & DIRECTIONS : Officer inviting tender_____ Maximum percentage for quantity of items of work to be executed beyond which rates are to be determined in accordance with clause **12.1**

DEFINITIONS:

2(e) Engineer :- _____

6 Accepting Authority :- CMD, N.S.C.

2(k) Percentage on cost of materials & labour to cover all over heads and profits :- 15%

2(i) Department/Employer:- _____

2(L) Standard schedule of Rates: - DSR-2014.

6(ii) Standard NSC contract form
Modified & corrected up to the date stipulated in schedule

3 Works to be carried out:-

4 Sufficiency of tender:-

5 Discrepancies and adjustment of errors:-

Signature :-
Subject : CN=ASHWIN D, SERIALNUMBER=2035d4fe20bae89488f496e7d7fdab3e3fcc14:
6a393f599e6d567e6c881eb03, ST=KARNATAKA, OID.2.5.4.17=560024, OU=
MANAGEMENT, O=NATIONAL SEEDS CORPORATION LTD, C=IN
User ID : ashwin.d
Serial No : D251AF

6 Signing of contract:-

SPECIFICATIONS & CONDITIONS FOR MODIFICATION & DISMANTLING WORKS

(A) Dismantling

The term dismantling implies carefully separating the parts without damage and removing. This may consist of dismantling one or more parts of the building as specified or shown on the drawing.

(B) Demolition

The term Demolition implies breading up. This shall consist of demolishing whole or part of work including all relevant items as specified or shown on the drawing.

Precautions

All materials obtained from dismantling or demolition shall be the property of the Government unless otherwise specified and shall be kept in safe custody until they are handed over to the Engineer-in-charge before starting the work.

The demolition shall always be well planned before hand and shall generally be done in reverse order of the one in which the structure was constructed. The operations shall be got approved from the Engineer-in-charge before starting the work.

Due care shall be taken to maintain the safety measures prescribed in IS; 4130 and safety code of terms and conditions.

Necessary propping, shoring and or under pinning shall be provided to ensure the safety of the adjoining work or property before dismantling and demolishing is taken up and the work shall be carried out in such a way that no damage is caused to the adjoining work or property. Wherever specified, temporary enclosures or partitions shall also be provided, as directed by the Engineer-in-Charge.

Necessary precautions shall be taken to keep down the dust nuisance to the minimum.

Dismantling shall be done is a systematic manner. All materials which are likely to be damaged by dropping from a height or by demolishing roofs, masonry etc. shall be carefully removed first. The dismantled articles shall be removed manually or otherwise, lowered to the ground (and not thrown) and then property stacked as directed by the Engineer-in-Charge.

Where existing fixing is done by nails, screws, bolts, rivets, etc., dismantling shall be done by taking out the fixing with proper tools and not by tearing or ripping off.

Any serviceable material, obtained during dismantling or demolition, shall be separated out and stacked properly as directed by the by the Engineer-in-Charge.

All unserviceable materials rubbish etc. shall be disposed off as directed by the Engineer-in-Charge.

The contractor shall maintain/disconnect existing services, whether temporary or permanent.

Measurements

All work shall be measured net in the decimal system, as fixed in its place, subject to the following limits, unless otherwise started hereinafter.

(a) Dimensions shall be measured correct to a cm.

(b) Areas shall be worked out in sqm correct to two places of decimal.

(c) Cubical contents shall be worked out to the nearest 0.01 cum.

Parts of work required to be dismantled and those required to be demolished shall be measured separately.

Signature :-
Subject : CN=ASHWIN D, SERIALNUMBER=2035d4fe20bae89488f496e7d7fdab3e3fcc14
6a393f599e6d567e6c881eb03, ST=KARNATAKA, OID.2.5.4.17=560024, OU=
MANAGEMENT, O=NATIONAL SEEDS CORPORATION LTD, C=IN
User ID : ashwin.d
Serial No : D251AF

Measurements of all work except hidden work shall be taken before demolition or dismantling and no allowance for increase in bulk shall be allowed.Specifications for deduction for voids, opening etc. shall be on the same basis as that adopted for new construction of the work.

Work executed in the following conditions shall be measured separately.

(a) Work in or under water and /or liquid mud.

(b) Work in or under foul positions.

Rates: The rate shall include the cost of all labour involved and tools used in demolishing and dismantling including scaffolding. The rate shall also included the charges for separating out and stacking the serviceable material properly and disposing off unserviceable materials as directed by the by the Engineer-in-Charge.

The rate shall also include for temporary shoring for the safety of portions not required to be pulled down, or of adjoining properly, and providing temporary, enclosures or partitions, where considered necessary.

Signature :-
Subject : CN=ASHWIN D, SERIALNUMBER=2035d4fe20bae89488f496e7d7fdab3e3fcc14
6a393f599e6d567e6c881eb03, ST=KARNATAKA, OID.2.5.4.17=560024, OU=
MANAGEMENT, O=NATIONAL SEEDS CORPORATION LTD, C=IN
User ID : ashwin.d
Serial No : D251AF

ADDITIONAL SPECIFICATION FOR ELECTRICAL WORK

1) The work shall be carried out as pr CPWD Specifications 2005, amended up to date
    a. and Indian Electricity Rules 1956 amended up-to-date.
2) The contractor shall obtain prior approval from the Engineer-in –charge for the material to be used at site of work.
3) The contractor shall have to submit the completion plan in triplicate along with one set of tracing cloth/paper failing which charges will be deducted from the final bill as per clause 8.3 of the contract.
4) The work shall be carried out in full co-operation with the other contractors working at site.
5) All inter connection shall be carried out with suitable lengths of cables, commensurate with current carrying capacity with solder less thimbles, All earth connections with metal boards shall be made only with soldered thimbles lugs. Nothing extra shall be paid to the contractor on these accounts.
6) Piano type switches & sockets of Anchor/Cona (ISI) make shall only be used with suitable colour Hylam sheet cover with full "HYLAM" inscription on it. Nothing extra paid on this account. Colour of the sheet shall be got approved from the Engineer-in-charge.
7) The route of conduits & cables are to be got approved from the Engineer-in-charge.
8) The drawing showing the arrangement of switches gears and dimensions for angle iron or sheet metal boards shall have to be got approved from the Engineer-in-charge before fabrication and installation at site of work.
9) Earthing shall be carried out in presence of Engineer-in-charge or his authorized representative.
10) All damages done to the building during execution of the work shall have to be made
    a. good by the electrical contractor at his own cost and risk for which nothing extra
    b. shall be paid.
11) The contractor will have to arrange the removal of the Malba /debris etc. to the site decided by the Engineer-in-charge after each days work and nothing extra will be paid on this account. It will be the contractor's responsibility to keep the site neat

    a. and clean after completion of the work other wise the site shall be got clear at the risk and cost of the contractor.
12) The contractor will make his own arrangements for watch & ward of the materials and

Signature:
Subject : CN=ASHWIN D, SERIALNUMBER=2035d4fe20bae89488f496e7d2dab3e3fcc14:
6a393f599e6d567e6c881eb03, ST=KARNATAKA, OID.2.5.4.17=560024, OU=
MANAGEMENT, O=NATIONAL SEEDS CORPORATION LTD, C=IN
User ID : ashwin.d
Serial No : D251AF

electrical installations until the work is completed and handed over to the department in full. No extra payment will be made to the contractor for the same.

13) The check nuts are to be provided on both ends of the conduits whenever it enters any metallic box, frame etc.

14) The contractor is bound to sign the site order book as and when reuired by the Engineer-in-charge or his authorized representative.

15) Persons expecting the work should have electrical licence as required according to the Indian Electricity Act.

16) The contractor will have to submit the completion certificate as per Annexure "E" of General specifications for electrical work, 2005. The prescribed test shall have to be conducted in the presence of Engineer-in-charge.

17) All AC switches & SDB's shall be numbered and other lettering work done on SDB's and main board as required by the Engineer-in-charge. Nothing extra shall be paid on this account.

18) Completed portion of the work shall not be taken over in parts unless otherwise agreed over by the Engineer-in-charge.

Signature :-
Subject : CN=ASHWIN D, SERIALNUMBER=2035d4fe20bae89488f496e7d7fdab3e3fcc14
6a393f599e6d567e6c881eb03, ST=KARNATAKA, OID.2.5.4.17=560024, OU=
MANAGEMENT, O=NATIONAL SEEDS CORPORATION LTD, C=IN
User ID : ashwin.d
Serial No : D251AF

RECOMMENDED MAKES OF ELECTRICAL EQUIPMENTS.

1	Transformer	a)	Siemens India Ltd.
		b)	NGEF Ltd
		c)	Crompton Greaves Ltd.
		d)	GEC Ltd
		e)	Jyoti Ltd.
		f)	Kasun (Madras)
		g)	NEI Ltd.
		h)	ITE Hyderabad
		i)	BHEL
2	HT Circuit breaker and fuse switch units.	a)	Siemens India Ltd.
		b)	NGEF Ltd
		c)	GEC Ltd
		d)	MET Ltd.
		e)	Jyoti Ltd.
		f)	Crompton Greaves Ltd.
		g)	Allind
		h)	Kirloskar
		i)	Voltas
		J	BHEL
3	LT switch gear (PCC) and motor control centre (MCC)	a)	Larsen & Tubro)
		b)	Siemens India Ltd.
		c)	Bhartia Cutler Hammper
		d)	English Electric company
4	Cables	a)	Cable Corporation of India
		b)	Fort Gloster
		c)	TCC
		d)	NICCO
		e)	Grandlay
		f)	Universal
		g)	Asian cables
		h)	Industrial cable
5	Ceiling fans	a)	GEC Ltd
		b)	Philips
		c)	Usha
		d)	Crompton
		e)	Orient
		f)	Cool home
6	Exhaust fans	a)	GEC Ltd
		b)	Philips
		c)	Usha
		d)	Crompton
		e)	Cool home
7	Lighting fixtures	a)	Incandesocent fixtures.
		b)	GEC Ltd
		c)	Philips

Signature :-
Subject : CN=ASHWIN D, SERIALNUMBER=2035d4fe20bae89488f496e7d7fdab3e3fcc04da393f599e6d567e6c881eb03, ST=KARNATAKA, OID.2.5.4.17=560024, OU=MANAGEMENT, O=NATIONAL SEEDS CORPORATION LTD, C=IN
User ID : ashwin.d
Serial No : D251AF

		d)	Deccon
		e)	Crompton
II	Flourescent and HPMV fixtures.		
		a)	Philips
		b)	GEC
		c)	Crompton
		d)	Anchor
		e)	Mysore Lamps
		f)	Best & Crompton Ltd.

Signature :-
Subject : CN=ASHWIN D, SERIALNUMBER=2035d4fe20bae89488f496e7d7fdab3e3fcc14
6a393f599e6d567e6c881eb03, ST=KARNATAKA, OID.2.5.4.17=560024, OU=
MANAGEMENT, O=NATIONAL SEEDS CORPORATION LTD, C=IN
User ID : ashwin.d
Serial No : D251AF

NATIONAL SEEDS CORPORATION LTD.

Section - V

Annexure-A

(To be submitted to NSC in online mode 'Technical Bid')

FORM FOR TECHNICAL BID

To
The Regional Manager,
National Seeds Corporation Ltd.,
Bangalore
Pin Code – 560024 (KARNATAKA)

FROM

Sir,

Profile of our Company is as under:

1.1. Constitution or legal status of Bidder (Attach Copy)

- Place of registration: _____
- Principal place of business: _____
- Power of attorney of signatory of Bid

A. Work performed as prime contractor/ supplier on works of Construction Seeds Processing Plant cum Storage building infrastructure over the last three years **(Bidder should have experience for successfully execution of at least three similar works of 40% value of the estimated cost of tender or two similar works of 50% value of the estimated cost of tender or one similar work of 80% value of the estimated cost of tender executed during the last five years).**

Year	Name & Address of Contract Person with his Mb. No. ,	Description of work	Work Order No. & Date	Value (Rs. in lakhs)	Stipulated period of Completion	Actual date of Completion	Remarks explaining reasons for delay and work completed.
1	2	3	4	5	6	7	8

- Attach a copy of Work Orders and proof of completion.

B. Information of Bid Capacity (works for which bids have been submitted and works which are yet to be completed) as on the date of this bid.

(A) Existing commitments and on-going works:

Name of work	Place and State	Contract No. & Date	Name & Address of Contract	Value of Contract (Rs.)	Stipulated period of completion	Value of order yet to be completed	Anticipated date of Completion
1	2	3	4	5	6	7	8

Signature :-
Subject : CN=ASHWIN D, SERIALNUMBER=2035d4fe20bae89488f496e7d7fdab3e3fcc14:
6a393f599e6d567e6c881eb03, ST=KARNATAKA, OID.2.5.4.17=560024, OU=
MANAGEMENT, O=NATIONAL SEEDS CORPORATION LTD, C=IN
User ID : ashwin.d
Serial No : D251AF

(B) Past works for which bids already submitted.

Name of work	Place and State	Tender No. & Date	Name &Address of Contractor with his Mb. No.	Stipulated period of completion	Date when decision is expected	Remarks, if any
1	2	3	4	5	6	7

- Attach supporting documents.

(C) Capabilities with respect to personnel, equipment and manufacturing facilities

1. Availability of infrastructure.

Name of the Building	Size (Sq.Mtr.)	Type of Structure
1	2	3

2. Availability of Equipment.

Item of Equipment	Available No. &Capacity	Owned/leased/to be procured	Nos./Capacity	Age/Condition	Remarks (From whom to be purchased)
1	2	3	4	5	6

3. Availability of Personnel.

Type of Employee	No.	Qualification	Experience
1	2	3	4

C. Qualification and experience of key personnel proposed for administration and execution of the Contract.

D. Attach biographical data.

Position	Name	Qualification	Years of Experience (general)	Years of experience in the proposed position.	Contact No.
1	2	3	4	5	6

4. Financial statement including Annual report: (i.e. Balance sheet and profit & loss account) duly signed by Statutory Auditor of last 3 years along with copies. Average annual Turnover in last three year should be submitted.

Financial year	Annual Turnover (Rs. in Lakh)	Annual Profit/ loss (Rs. in Lakh)	Remarks

5. Registration:

TIN/VAT No.	CST No.

Signature :-
Subject : CN=ASHWIN D, SERIALNUMBER=2035d4fe20bae89488f496e7d7fdab3e3fcc14:
6a393f599e6d567e6c881eb03, ST=KARNATAKA, OID.2.5.4.17=560024, OU=
MANAGEMENT, O=NATIONAL SEEDS CORPORATION LTD, C=IN
User ID : ashwin.d
Serial No : D251AF

6. Income tax Details:-

PAN No	Returns for Last Two Years (attached)	
	Year	Copy

EMD :

Online	Date & Time	Amount

7. Particular of Banker :

Name and address of Banker	Type of Account	Account No.	IFS Code	MICR Code

8. MSME registration details (NSIC registered unit) along with a valid copy of NSIC Registration Certificate (Attach) :

Registration No.	Category of Firm General/SC/ST	Validity Period	Registered Item/Items	Quantitative Capacity	Monetary Limit

9. Information on litigation history in which the Bidder is involved.

Other party(s)	Employer	Cause of dispute	Amount	Remarks involved showing present status
1	2	3	4	5

11. Department/Institution/Public Enterprises/Undertaking and no arbitration case is lying pending with this office as on date as per Performa attached in annexure A-1 (Copy Attached).
13. Evidence of Access of Finance Required (With Valid Proof) Attach:-
14. Authorization for Signing Bid (With Valid Ltr) (Attach).

I hereby certify that all the information mentioned above are true and in case any information is found to be incorrect, my bid may be treated as rejected by NSC management.

Thanking you,

Stamp of the Company

Signature: ----------

Place: - Name of Authorized Signatory: - ----------

Date:-. Complete Postal Address: ----------

Phone No.: ----------

Mb. No. :- ----------

E-mail Address: - ----------

Signature :-
Subject : CN=ASHWIN D, SERIALNUMBER=2035d4fe20bae89488f496e7d7fdab3e3fcc14:
6a393f599e6d567e6c881eb03, ST=KARNATAKA, OID.2.5.4.17=560024, OU=
MANAGEMENT, O=NATIONAL SEEDS CORPORATION LTD, C=IN
User ID : ashwin.d
Serial No : D251AF

SECTION -VI

FORM OF PERROMANCE SECURITY (GUARANTEE)
BANK GUARANTEE BOND

In consideration of the **National Seeds Corporation** (hereinafter called **Corporation**) to accept the terms and conditions of the proposed agreement between ---------- and ---------- (hereinafter called" the Contractor) for the work----------(hereinafter called the said agreement) having agreed to production of an irrevocable Bank Guarantee for Rs.--------- (Rs.---------) as a security/guarantee from the contractor for compliance of his obligations in accordance with the terms and conditions in the said agreement.

We--------- (hereinafter referred to as the 'the Bank') hereby undertake to pay the Corporation an amount not exceeding Rs.-------- (Rs.---------) on demand by the Corporation.

2 We,---------- do hereby undertake to pay the amounts due and payable under this guarantee without any demure, merely on a demand from the Corporation stating that the amount claimed as required to meet the recoveries due or likely to be due from the said contractor. Any such demand made on the bank shall be conclusive as regards the amount due and payable by the bank under this guarantee. However, our liability under this guarantee shall be restricted to an amount not exceeding Rs. ------ (Rs. ---------- only.)

3 We, the said bank further undertake to pay the Corporation any money so demanded notwithstanding any dispute or disputes raised by the contractor in any suit or proceeding pending before any count or Tribunal relating thereto, our liability under this present being absolute and unequivocal.

The payment so made by us under this bond shall be a valid discharge of our liability for payment there under and the contractor shall have no claim against us for making such payment.

4 We-------- ----- further agree that the guarantee herein contained shall remain in full force and effect during the period that would be taken for the performance of the said agreement and that it shall continue to be enforceable till all the dues of the Corporation under or by virtue of the said agreement have been fully paid and its claims satisfied or discharged or till Engineer on behalf of the Corporation certified that the terms and conditions of the said agreement have been fully and properly carried out by the said contractor and accordingly discharges this guarantee.

Signature
Subject : CN=ASHWIN D, SERIALNUMBER=2035d4fe20bae89488f496e7d7fdab3e3fcc14:
6a393f599e6d567e6c881eb03, ST=KARNATAKA, OID.2.5.4.17=560024, OU=
MANAGEMENT, O=NATIONAL SEEDS CORPORATION LTD, C=IN
User ID : ashwin.d
Serial No : D251AF

5 We---------- (indicate the name of bank) further agree that the Corporation shall have fullest liberty without our consent and without affecting in any manner our obligation hereunder to vary any of the terms and conditions of the said agreement or to extend time of performance by the said contractor from time to time or to postpone for any time or from time to time any of the powers exercisable by the Corporation against the said contractor and to forbear or enforce any of the terms and conditions relating to the said agreement and we shall not be relieved from our liability by reason of any such variation or extension being granted to the said contractor or for any forbearance, act of omission.

On the part of the Corporation any indulgence by the Corporation to the said contractor or by any such matter or thing whatsoever which under the law relating to sureties would, but for this provision, have effect of so relieving us.

6 This guarantee will not be discharged due to the change in the constitution of the Bank or the contractor.

7 We--------- (indicate the name of bank) lastly undertake not to revoke this guarantee except with the previous consent of the Corporation in writing.

8 This guarantee shall be valid up to ---------- unless extended on demand by the Corporation. Notwithstanding anything mentioned above, our liability against this guarantee is restricted to Rs.---------- (Rs._----------) and unless a claim in writing is lodged with us within six months of the date of expiry or the extended date of expiry of this guarantee all our liabilities under this guarantee shall stand discharged.

Dated the ---------- day of ---------- for ---------- (indicate the name of bank)

Signature :-
Subject : CN=ASHWIN D, SERIALNUMBER=2035d4fe20bae89488f496e7d7fdab3e3fcc14
6a393f599e6d567e6c881eb03, ST=KARNATAKA, OID.2.5.4.17=560024, OU=
MANAGEMENT, O=NATIONAL SEEDS CORPORATION LTD, C=IN
User ID : ashwin.d
Serial No : D251AF

FORM OF AGREEMENT

Contract no. ……
.

Dated ……..…

This agreement is made between National Seeds Corporation Limited, Area Office .---------- ---------- having its registered office at Beej Bhawan, Pusa complex, New Delhi-110012 as the first part, referred here after as corporation and M/S or
Sh…….. , the party as the second part, referred as contractor for at----------.

Whereas the Corporation being desirous of having performing the provision of works mentioned above, enumerated or referred in Notice inviting Tender, General conditions of contract, specifications, Drawing and other documents constituting the tender and acceptance thereof, copy hereto annexed, all of which are designed in form of this contract and are included in the term 'CONTRACT' when ever here in used.

And whereas the Corporation accepted the tender of contractor for the provision and the execution of the said work upon the terms and conditions as contained in the tender documents submitted by the contractor form in part of the contract.

Now this agreement witnessed and it is hereby agreed and declared as follows:

1 The consideration of the payment to be made to the contractor for the works to be executed by him the contractor hereby covenant with the corporation of contractor shall and will duly provide, execute and complete the said works in ----….months as per the terms of the contract and maintain the same at his own cost during the maintenance period, "…….. ",.there after , perform all other acts and things in the contract mentioned or described or which are to be implied there from or may be reasonable necessary for the completion of the said works and at the times and in the manner and subject to the terms and conditions or stipulations mentioned in the contract.

2 In consideration of the due provision, execution and completion of the said works, the corporation does hereby agree to pay to the contractor for the works actually done by him at the rates quoted by the contractor against the bill of quantities forming part of the tender documents and accepted by the corporation or at Agreed Rates and such other sums are may become payable to the contractor under the provision of the contractor such payments to be made at such time and in such manner as provided for in the contract.

3 And in consideration of the above, the contractor does hereby agree to pay to the Corporation the sums as may be due to the corporation for the services, if any, rendered by the corporation to the contractor and such other sum or sums as may become payable
to the corporation as per the terms and conditions of contractor, such payment to be made at such manner as it provided in the contract.

4 Notwithstanding the execution of this agreement at any place other than Delhi the parties

Signature: [illegible]
MANAGEMENT, O=NATIONAL SEEDS CORPORATION LTD, C=IN
User ID : ashwin.d
Serial No : D251AF

expressly agree that this Agreement shall be deemed to have been signed at Delhi and the courts at Delhi alone shall have jurisdiction in respect of this contract and dispute if any. The parties shall not take any proceedings in any other court having concurrent jurisdiction in the matter.

In witness where of the parties hereto have signed on the date respectively set under their signatures.

SIGNED AND DELIVERED FOR AND ON BEHALF OF AT

In the presence of :-

Witness 1_____.

2_____.

SIGNED AND DELIVERED FOR AND ON BEHALF OF AT

In the presence of :-

Witness 1_____.

2_____.

Signature :-
Subject : CN=ASHWIN D, SERIALNUMBER=2035d4fe20bae89488f496e7d7fdab3e3fcc14
6a393f599e6d567e6c881eb03, ST=KARNATAKA, OID.2.5.4.17=560024, OU=
MANAGEMENT, O=NATIONAL SEEDS CORPORATION LTD, C=IN
User ID : ashwin.d
Serial No : D251AF

NATIONAL SEEDS CORPORATION LTD.

Annexure-A-1

Affidavit Certificate

I /We_____ (Name, Designation and Address) hereby declaring that my/our firm/Company has not been neither black-listed nor de-barred from participation in tender by any of the Govt. Department/ Organization /PSUs /Institution etc , where I /We had supplied the goods during the last_____ years as well as no arbitration case pending in NSC .

Signature of Authorized signatory ----------

Name_____

Designation _____

Name of the Firm/Company _____

Full address _____

_____

stamp_____

Place: _____

Dated: _____

*****

Signature :-
Subject : CN=ASHWIN D, SERIALNUMBER=2035d4fe20bae89488f496e7d7fdab3e3fcc14:
6a393f599e6d567e6c881eb03, ST=KARNATAKA, OID.2.5.4.17=560024, OU=
MANAGEMENT, O=NATIONAL SEEDS CORPORATION LTD, C=IN
User ID : ashwin.d
Serial No : D251AF

PART - B

Signature :-
Subject : CN=ASHWIN D, SERIALNUMBER=2035d4fe20bae89488f496e7d7fdab3e3fcc14
6a393f599e6d567e6c881eb03, ST=KARNATAKA, OID.2.5.4.17=560024, OU=
MANAGEMENT, O=NATIONAL SEEDS CORPORATION LTD, C=IN
User ID : ashwin.d
Serial No : D251AF

NATIONAL SEEDS CORPORATION LTD.

SECTION - VII

Annexure-B

(It is to be submitted to NSC in online mode 'PRICE BID')

To,

Regional Manager
National Seeds Corporation Ltd.,
Bangalore
Pin Code – 560024 (KARNATAKA)

From-

_____
_____
_____
_____

Sir,

We have examined the prescribed specification and read the Terms & Conditions of E-Tender No. _____, issued under File No Engg(HVR)/NSC-BNG/2017-18 dated 05.12.2017 for Construction of Seed Storage Godown of capacity 20000 qtl, confirming the specification as per Annexure A of Tender Document at NSC Haveri. Our rates to your specification, Terms & Conditions for below work are mentioned as under:-

Abstract of Cost For Construction of Seed Storage Godown Size: 60m x 25.5m x 5.5m, Capacity: 20000 Qtls, arch type truss less roof with 1.3mm thick Galvalume sheet at NSC Haveri						
SN	**DSR-2014 Code**	**Description**	**Quantity**	**Unit**	**DSR-14 rate**	**Amount (₹) as per DSR-2014**
1	2.31	Clearing jungle including uprooting of rank vegetation, grass, brush wood, trees and saplings of girth upto 30 cm measured at a height of 1m above ground level and removal of rubbish upto a distance of 50 m outside the periphery of the area cleared.	2500.00	cum	6.42	16050.00
2	2.6.1	Earth work by mechanical means (Hydraulic excavation)/manual means in foundation trenches or drains (not exceeding 1.5 mtr in width or 10 sqm on plan), including dressing of side & ramming of bottoms, lift upto 1.5 mtr, including getting out the excavated soil & disposal of surplus excavated soil as directed, within a lead of 50mtr. All Kinds of soils.(Black cotton soil) Code No - 2.6.1, (Page No. 72)	1100.00	cum	155.60	171160.00
3	16.3.9 + 2.25	Supplying and filling in plinth with good earth under floor in layers not exceeding 20 cm in depth consolidating including watering, ramming, consolidating and dressing complete (16.3.9)	1674.00	cum	433.30	725344.20
4	2.27	Supplying and filling in plinth with Jamuna sand under floors, including watering, ramming, consolidating and dressing complete.	250.00	cum	910.25	227562.50
5	15.60	Disposal of building rubbish /malba/ similar unservicable, dismantled of waste materials by mechnical means, including loading, transpotation unloading to approved municipal dumping ground or as approved by engineer in charge beyound 50m initial lead for all leads including all lifts involved	1100.00	cum	123.70	136070.00

Signature :-
Subject : CN=ASHWIN D, SERIALNUMBER=2035d4fe20bae89488f496e7d7fdab3e3fcc14:
6a393f599e6d567e6c881eb03, ST=KARNATAKA, OID.2.5.4.17=560024, OU=
MANAGEMENT, O=NATIONAL SEEDS CORPORATION LTD, C=IN
User ID : ashwin.d
Serial No : D251AF

6	16.3.3 & 16.4	Supplying and stacking at site 90mm to 45mm size stone aggregate and laying , spreading nd compacting stone aggregate of specified sizes to WBM specifications in uniform thickness, hand picking , rolling with 3 wheeled road / vibratory roller 8-10 tonne capacity in stages to proper grade and camber, applying and brooming requisite type of screening / binding material to fll up interstices of coarse aggregate, watering and compacting to the required density.	400.00	cum	1735.50	694200.00
7	4.1.8	Providing and laying in position cement concrete of specified grade excluding the cost of centering and shuttering - All work up to plinth level : - All work up to plinth level with 1:4:8 (1 cement : 4 coarse sand : 8 graded stone aggregate 20 mm nominal size) (Code No.- 4.1.8)	275.00	cum	4301.15	1182816.25
8	4.17	Making plinth protection 50 mm thick of cement concrete 1:3:6 (1 cement: 3 coarse sand : 6 graded stone aggregate 20 mm nominal size) over 75mm thick bed of dry brick ballast 40 mm nominal size, well rammed and consolidated and grouted with fine sand, including finishing the top smooth. Code No. 4.17	175.00	sqm	419.30	73377.50
9	5.1.2	Providing and laying in position specified grade of reinforced cement concrete, excluding the cost of centering, shuttering, finishing and reinforcement - All work up to plinth level and upto fifth floor level 1:1.5:3 (1 cement : 1.5 coarse sand : 3 graded stone aggregate 20 mm nominal size) (Code No.- 5.1.3)	70.00	cum	5970.60	417942.00
10	5.2.2	Reinforced cement concrete work in walls (any thickness), including attached pilasters, buttresses, plinth and string courses, fillets, columns, pillars, piers, abutments, posts and struts etc. excluding cost of centering, shuttering, finishing and reinforcement : (5.2.2) 1:1.5:3 (1 cement : 1.5 coarse sand : 3 graded stone aggregate 20 mm nominal size) up to floor five level.	120.00	cum	7074.30	848916.00
11	5.22.3	Steel reinforcement for R.C.C. work including straightening, cutting, bending, placing in position and binding all complete upto plinth level.v (5.22.3)	25000.00	kg	68.10	1702500.00
12	5.9.1	Centering and shuttering including strutting, propping etc. and removal of form for : Foundations, footings, bases of columns, etc. for mass concrete foundation and superstructure (a) foundation, footings, bases of column, etc	350.00	sqm	196.45	68757.50
13	5.9.6	Centering and shuttering including strutting, propping etc. and removal of form for : Foundations, footings, bases of columns, etc. for mass concrete foundation and superstructure (b) superstructure above plinth upto floor V level	1100.00	sqm	453.35	498685.00

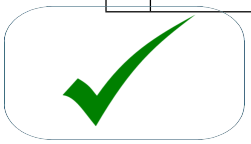

Signature :-
Subject : CN=ASHWIN D, SERIALNUMBER=2035d4fe20bae89488f496e7d7fdab3e3fcc14:
6a393f599e6d567e6c881eb03, ST=KARNATAKA, OID.2.5.4.17=560024, OU=
MANAGEMENT, O=NATIONAL SEEDS CORPORATION LTD, C=IN
User ID : ashwin.d
Serial No : D251AF

14	4.6.1	Providing and fixing at or near ground level precast cement concrete in kerbs, edgings etc. as per approved pattern and setting in position with cement mortar 1:3 (1 Cement : 3 coarse sand), including the cost of required centering, shuttering complete. (4.6.1) DSR 2014	70.00	cum	5714.95	400046.50
15	4.5.2	Providing and fixing up to floor five level precast cement concrete string or lacing courses, copings, bed plates, anchor blocks, plain window sills, shelves, louvers, steps, stair cases, etc., including hoisting and setting in position with cement mortar 1:3 (1 Cement : 3 coarse sand), cost of required centering complete. (4.5.2) DSR 2014 in superstructure upto floor v level. cement block masonry.	228.13	cum	6269.80	1430329.47
16	10.6.3	Supplying and fixing rolling shutters of approved make, made of required size M.S. laths, interlocked together through their entire length and jointed together at the end by end locks, mounted on specially designed pipe shaft with brackets, side guides and arrangements for inside and outside locking with push and pull operation complete, including the cost of providing and fixing necessary 27.5 cm long wire springs manufactured from high tensile steel wire of adequate strength conforming to IS: 4454 - part 1 and M.S. top cover of required thickness for rolling shutters. 10.6.3 80x0.90 mm M.S. laths with 0.90 mm thick top cover	75.00	sqm	1797.50	134812.50
17	10.7	Providing and fixing ball bearing for rolling shutters.	40.00	nos	438.95	17558.00
18	10.11.1	Providing and fixing factory made ISI marked steel glazed doors, windows and ventilators, side /top /centre hung, with beading and all members such as F7D, F4B, K11 B and K12 B etc. complete of standard rolled steel sections, joints mitred and flash butt welded and sash bars tenoned and riveted, including providing and fixing of hinges, pivots, including priming coat of approved steel primer, but excluding the cost of other fittings, complete all as per approved design, (sectional weight of only steel members shall be measured for payment). 10.11.1 Fixing with 15x3 mm lugs 10 cm long embedded in cement concrete block 15x10x10 cm of C.C. 1:3:6 (1 Cement : 3 coarse sand : 6 graded stone aggregate 20 mm nominal size)	425.00	kg	114.15	48513.75
19	9.48.1	Providing and fixing M.S. grills of required pattern in frames of windows etc. with M.S. flats, square or round bars etc. including priming coat with approved steel primer all complete. 9.48.1 Fixed to steel windows by welding	425.00	kg	109.00	46325.00

Signature :-
Subject : CN=ASHWIN D, SERIALNUMBER=2035d4fe20bae89488f496e7d7fdab3e3fcc14:
6a393f599e6d567e6c881eb03, ST=KARNATAKA, OID.2.5.4.17=560024, OU=
MANAGEMENT, O=NATIONAL SEEDS CORPORATION LTD, C=IN
User ID : ashwin.d
Serial No : D251AF

20	9.66.1	Providing and fixing ISI marked oxidised M.S. handles conforming to IS:4992 with necessary screws etc. complete : 125 mm	66.00	nos	28.90	1907.40
21	9.68.2	Providing and fixing oxidised M.S. casement stays (straight peg type) with necessary screws etc. complete. 250 mm weighing not less than 150 gms	66.00	nos	32.70	2158.20
22	9.74.4	Providing and fixing bright finished brass tower bolts (barrel type) with necessary screws etc. complete : 250x10 mm	66.00	nos	131.50	8679.00
23	16.75	Providing and laying C.C. flooring of mix M-15 with ready mixed concrete from batching plant. The ready mixed concrete shall be laid in the panel including shuttering of panel and finished with screed board vibrator, vacuum dewatering process and finally finished by floating, brooming with wire brush etc. complete as per specifications and directions of Engineer-incharge. (Note:- Cement content considered in this item is @ 330 kg/cum. Excess/less cement used as per design mix is payable/ recoverable separately).	120.00	cum	6848.85	821862.00
24	11.6	Cement plaster skirting upto 30cm height, with cement mortar 1:3 (1cement : 3coarse sand), finished with a floating coat of neat cement 18mm thick	28.00	sqm	377.25	10563.00
25	12.41.2	Providing and fixing on wall face unplasticised Rigid PVC rain water pipes conforming to IS : 13592 Type A, including jointing with seal ring conforming to IS : 5382, leaving 10 mm gap for thermal expansion, (i) Single socketed pipes. (a) 110 mm diameter	110.00	MTR	231.65	25481.50
26	12.42.6.2	Providing and fixing on wall face unplasticised - PVC moulded fittings/accessories for unplasticised Rigid PVC rain water pipes conforming to IS : 13592 Type A, including jointing with seal ring conforming to IS : 5382, leaving 10 mm gap for thermal expansion. 12.42.6.2 110 mm Shoe	20.00	MTR	295.10	5902.00
27	12.43.2	Providing and fixing unplasticised -PVC pipe clips of approved design to unplasticised - PVC rain water pipes by means of 50x50x50 mm hard wood plugs, screwed with M.S. screws of required length, including cutting brick work and fixing in cement mortar 1:4 (1 cement : 4 coarse sand)and making good the wall etc. complete. 12.43.2 110 mm	140.00	MTR	189.05	26467.00
28	13.7.2	12mm Cement plaster finished with a floating coat of neat cement of mix 1:6 (cement & coarse)	2400.00	SQM	203.25	487800.00

Signature :-
Subject : CN=ASHWIN D, SERIALNUMBER=2035d4fe20bae89488f496e7d7fdab3e3fcc14:
6a393f599e6d567e6c881eb03, ST=KARNATAKA, OID.2.5.4.17=560024, OU=
MANAGEMENT, O=NATIONAL SEEDS CORPORATION LTD, C=IN
User ID : ashwin.d
Serial No : D251AF

29	13.16	6 mm cement plaster of mix : 13.16.1 1:3 (1 cement : 3 fine sand)	300.00	SQM	134.70	40410.00
30	13.37.1	White washing with lime to give an even shade : 13.37.1 New work (three or more coats)	1200.00	SQM	16.20	19440.00
31	13.47.1	Finishing walls with Acrylic Smooth exterior paint of required shade : 13.46.1 New work (Two or more coat applied @ 1.67 ltr/10 sqm over and including priming coat of exterior primer applied @ 2.20 kg/ 10 sqm)	1500.00	SQM	94.95	142425.00
32	13.50.3	Applying priming coat with ready mixed red zinc chromate primer of approved brand and manufacture on steel galvanised iron/steel works.	180.00	SQM	27.00	4860.00
33	13.48.3	Finishing with Deluxe Multi surface paint system for interiors and exteriors using Primer as per manufacturers specifications : 13.48.2 Painting wood work with Deluxe Multi Surface Paint of required shade. Two or more coat applied @ 0.90 ltr/10 sqm over an under coat of primer applied @0.75 ltr/ 10 sqm of approved brand and manufacture 13.48.3 Painting Steel work with Deluxe Multi Surface Paint to give an even shade. Two or more coat applied @ 0.90 ltr/ 10 sqm over an under coat of primer applied @ 0.80 ltr/ 10 sqm of approved brand and manufacture	180.00	sqm	89.10	16038.00
34	19.6.4	Providing and laying non-pressure NP2 class (light duty) R.C.C. pipes with collars jointed with stiff mixture of cement mortar in the proportion of 1:2 (1 cement : 2 fine sand) including testing of joints etc. complete : 300 mm dia RCC pipe	100.00	mtr	506.35	50635.00
35	19.6.5	Providing and laying non-pressure NP2 class (light duty) R.C.C. pipes with collars jointed with stiff mixture of cement mortar in the proportion of 1:2 (1 cement : 2 fine sand) including testing of joints etc. complete : 450 mm dia RCC pipe	50.00	mtr	705.90	35295.00
36	19.19.1.1	Providing and fixing in position pre-cast R.C.C. manhole cover and frame of required shape and approved quality 19.19.1 L D- 2.5	20.00	nos	1131.70	22634.00
37	13.6	Painting with synthetic enamel paint of approved brand and manufacture to give an even shade	50.00	sqm	74.40	3720.00
		TOTAL				10567243.27

Signature :-
Subject : CN=ASHWIN D, SERIALNUMBER=2035d4fe20bae89488f496e7d7fdab3e3fcc14:
6a393f599e6d567e6c881eb03, ST=KARNATAKA, OID.2.5.4.17=560024, OU=
MANAGEMENT, O=NATIONAL SEEDS CORPORATION LTD, C=IN
User ID : ashwin.d
Serial No : D251AF

NOTE :		
1	Estimated cost is as per the rate of DSR- 2014 and tentative market rate for NSI items.	**₹ 1,05,67,243/-**
2	*The rate shall include the cost of all labour, material, equipment, transport (lead and lift) used in the work up to the height of* Floor - V level and all taxes etc as applicable on the work.	
3	The contractor shall bear the cost of samples, testing fee, if tested materials outside in laboratory.	
4	Basic rate may be quoted for materials, labours and P,O,L, in the Schedule 'E' of tender.	
5	Rate should be valid for one year	
	I/We here by tender my/our rates ---------- % (percent) above the rate for works at Sl. No. 1 to 37	
	I/We here by tender my/our rates ---------- % (percent) below the rate for works at Sl. No. 1 to 37	

Signature of the Contractor
with Seal

Place: -
Date:-.

Name of Authorized Signatory : -- ----------
E-mail Id: ----------
Phone No : ----------
Mb. No. :- ----------
Complete Postal Address: ----------

Signature :-
Subject : CN=ASHWIN D, SERIALNUMBER=2035d4fe20bae89488f496e7d7fdab3e3fcc14:
6a393f599e6d567e6c881eb03, ST=KARNATAKA, OID.2.5.4.17=560024, OU=
MANAGEMENT, O=NATIONAL SEEDS CORPORATION LTD, C=IN
User ID : ashwin.d
Serial No : D251AF

Electrical estimate for Seed Store at NSC, Haveri

Sl No. /DSR-14	DESCRIPTION OF ITEMS	QTY	UNIT	RATE	AMOUNT
1/1.10.3	Wiring for light point/fan point/exhaust fan point/call bell point with 1.5 sq mm FRLS PVC insulated copper conductor single core cable in surface/recessed medium class PVC conduit with modular switch, modular plated, suitable GI box and earthling the points with 1.5 sq.mm. FRLS PVC insulated copper conductor single core cable (i/c cutting/drilling in vertical/horizontal iron hoist, welding of clamps) etc. complete as required group " C"	62	nos	718.00	44516.00
2/1.23	Supply and fixing following piano type switch/ socket on the existing switch box/cover including connections etc as required.				
1.23.1	5/6 Amp Switch	12	nos	33.00	396.00
1.23.4	3 pin 5/6 Amp socket out let	12	nos	41.00	492.00
1.23.3	15/16 Amp Switch	2	nos	111.00	222.00
1.23.	6 pin 15/16 Amp socket out let	2	nos	150.00	300.00
3/1.12	Wiring for light/ power plug with 2x4 sq mm FRLS PVC insulated copper conductor single core cable in surface/recessed PVC conduit along with 1 no. 4 sq mm FRLS PVC insulated copper conductor single core cable for loop earthing as required.	60	mtr	162.00	9720.00
4/1.22	Supplying and fixing following size metal box in surface or in recess with suitable size of phenolic laminated sheet cover in front including painting etc. as required.				
1.22.5	180x100x60mm deep	2	nos	127.00	254.00
5/1.7	Wiring for circuit/sub main wiring along with earth wire with the following sizes of FRLS PVC insulated copper conductor, single core cable in surface/ recessed medium class PVC conduit as required.				
1.7.1	2X1.5 sq.mm+1x1.5 sq.mm. earth wire.	160	mtr	106.00	16960.00
1.7.2	2X2.5 sq.mm+1x2.5 sq.mm. earth wire.	300	mtr	131.00	39300.00
6/2.3	Supplying and fixing following way, single pole and neutral, sheet steel, MCB distribution board consumer unit, 240 volts, on surface/recess, complete with tinned copper bus bar, neutral bus bar, earth bar, din bar, hinged front acrylic cover for the MCB knobs, detachable gland plate, interconnections, phosphatised and powder painted including earthing etc. as required. (But without MCB/RCCB/Isolator).				
2.3.7	2+8 way Double Door	2	nos	1132.00	2264.00

Signature :-
Subject : CN=ASHWIN D, SERIALNUMBER=2035d4fe20bae89488f496e7d7fdab3e3fcc14:
6a393f599e6d567e6c881eb03, ST=KARNATAKA, OID.2.5.4.17=560024, OU=
MANAGEMENT, O=NATIONAL SEEDS CORPORATION LTD, C=IN
User ID : ashwin.d
Serial No : D251AF

7/2.10	Supplying and fixing 5 amps to 32 amps rating, 240/415 volts, 'C' curve, miniature circuit breaker suitable for inductive load of following pole in the existing MCB DB complete with connections, testing and commissioning etc. as required.				
2.10.1	single pole MCB	16	nos	169.00	2704.00
8/2.12	Supplying and fixing following rating, double pole, 240 volts, isolator in the existing MCB DB complete with connections, testing and commissioning etc. as required.		nos		
2.12.2	63 Amp 2 Pole MCB Isolator	2	nos	250.00	500.00
9/MR	Supply and installation, testing and commissioning of Weather proof, anti corrosion wall/ceiling mounted opal colour decorative, round shape engineering plastic housing with PC cover suitable for 1x20W Retrofit CFL model no.LHFHCFE1TL6W020 (on rolling shutter cantilever) Havells/Phillips/Crompton make.	6	nos	1300.00	7800.00
10/MR	Supplying, installation, testing and commissioning of LED street light fitting with transparent, acrylic diffuser and aluminum canopy complete with all accessories duly wired and including supply of 1 No. 65/73 watt LED lamp etc. as required. (Street light: type 919515810008 BRP351 1xLLM1800/740 220-240V- 50Hz SI 12500 Phillips/ Crompton/ Havells make.	10	nos	12500.00	100000.00
11/12.34	Supplying and fixing of 32 mm dia x 2 mtr. Long GI pipe (medium class) bracket for mounting of fluorescent/HMVP street light fitting on pole /wall including bending the pipe to the required shape, 2 Nos.x40 mm x 3 mm flat iron clamp with nut, bolts and washer & wiring with 1.5 sq mm PVC/WP wiring and painting the flat iron clam with primer and finishing paint as required.	10	nos	749.00	7490.00
12/Market Rate	Installation, testing and commissioning of LED Street light fitting on the existing bracket including connection etc. as required.	10	nos	300.00	30000.00
13/ Market Rate	Supply and Fixing of CFL lamp of 20 watt complete with all accessories including supplying & fixing of brass batten holder connections etc. as required Phllips/Osram/Havells make…… on wall.	30	nos	250.00	7500.00
14/Market Rate	Supply and fixing of Polycarbonate Flood light luminaire for twin high wattage retrofit CFL with 2x65 Watt Retro CFL (FU), Havells/Phillips make (in Seed Store & Processing Plant)	2	nos	4800.00	9600.00
15/Market Rate	Supplying of the following size of PVC insulated, PVC sheathed 1.1 KV grade aluminium conductor armoured cable ISI mark.				
	a) 2X10 sqmm.....	80	mtr	80.00	4800.00
	b) 2X16 sqmm.....	70	mtr	150.00	9000.00

Signature :-
Subject : CN=ASHWIN D, SERIALNUMBER=2035d4fe20bae89488f496e7d7fdab3e3fcc14:
6a393f599e6d567e6c881eb03, ST=KARNATAKA, OID.2.5.4.17=560024, OU=
MANAGEMENT, O=NATIONAL SEEDS CORPORATION LTD, C=IN
User ID : ashwin.d
Serial No : D251AF

16/7.1	Laying of 1 no. PVC insulated & PVC sheathed/ XLPE aluminum power cable of 1.1 KV grade of size not exceeding 35 sqmm direct in ground including excavation sand cushioning, protective covering & refilling the trench etc. as required				
7.1.1/	a) 2X16 sqmm.....	60	mtr	195.00	5850.00
17/7.7	Laying of 1 no. PVC insulated & PVC sheathed/ XLPE aluminum power cable of 1.1 KV grade of size not exceeding 35 sqmm on wall clamped with 1 mm thick saddle.				
7.7.1	a) 2X10 sqmm.....	80	mtr	24.00	1440.00
	b) 2X16 sqmm.....	10	mtr	24.00	240.00
18/9.1	Supplying and making end termination with brass compression gland and aluminum lugs for the following size of PVC insulated and PVC sheathed/XLPE aluminum conductor cable of 1.1 KV grade as required.				
9.1.2/	a) 2x10 sq mm U.G. armoured cable	2	set	148.00	296.00
9.1.3/	b) 2x16 sq mm U.G. armoured cable	2	set	160.00	320.00
19/2933	Providing and fixing MV danger notice plate of 200 mm x 150mm, made of mild steel, at least 2 mm thick, and vitreous enameled white on both sides, and with inscription in single red colour on front side as required.	1	nos	40.00	40.00
20/5.2	Earthing with G.I. earth pipe 4.5 mtr long ,40 mm dia (Medium class) including accessories and providing masonry enclosure with cover plate having locking arrangement and watering pipe etc. with charcoal and salt as required.	1	nos	3926.00	3926.00
21/5.13	Providing and Laying earth connection FRLS from earth electrode with 4mm dia copper Wire in 15 mm dia G.I. pipe from earth electrode i/c thimble excavation of earth and re-filling the same as required.	10	mtr	213.00	2130.00
	Total				308060.00
Estimated cost is as per the rate of DSR- 2014 and tentative market rate for NSI items.					
Estimated quantity may increase or decrease at the time of execution based on actual measurements against drawing and design approved by the Competent Authority.					

Signature :-
Subject : CN=ASHWIN D, SERIALNUMBER=2035d4fe20bae89488f496e7d7fdab3e3fcc14:
6a393f599e6d567e6c881eb03, ST=KARNATAKA, OID.2.5.4.17=560024, OU=
MANAGEMENT, O=NATIONAL SEEDS CORPORATION LTD, C=IN
User ID : ashwin.d
Serial No : D251AF

NOTE		
1	Estimated cost is as per the rate of DSR- 2014 and tentative market rate for NSI items.	**₹ 3,08,060/-**
2	*The rate shall include the cost of all labour, material, equipment, transport (lead and lift) used in the work up to the height of* Floor - V level and all taxes etc as applicable on the work.	
3	The contractor shall bear the cost of samples, testing fee, if tested materials outside in laboratory.	
4	Basic rate may be quoted for materials, labours and P,O,L, in the Schedule 'E' of tender.	
5	Rate should be valid for one year	
	I/We here by tender my/our rates ---------- % (percent) above the rate for works at Sl. No. 1 to 21	
	I/We here by tender my/our rates ---------- % (percent) below the rate for works at Sl. No. 1 to 21	

Signature of the Contractor
With seal

Place: -
Date:-.

Name of Authorized Signatory : -- ----------
E-mail Id: ----------
Phone No : ----------
Mob. No. :- ----------
Complete Postal Address: ----------

Signature :-
Subject : CN=ASHWIN D, SERIALNUMBER=2035d4fe20bae89488f496e7d7fdab3e3fcc14:
6a393f599e6d567e6c881eb03, ST=KARNATAKA, OID.2.5.4.17=560024, OU=
MANAGEMENT, O=NATIONAL SEEDS CORPORATION LTD, C=IN
User ID : ashwin.d
Serial No : D251AF

Schedule for Providing and Fixing of Truss less roof with Galvalume sheet for 20000 qtl Capacity Seed storage godown at Haveri (Part B)

The roofing system should be designed to with stand the wind load (as per IS 875 part-3) & Earth quake load (As per ISI 893). The design should also comply with any other relevant IS codes.

The steel sheet shall be 3'.0" (914 mm) width (tolerance +/-2mm which shall be curved and molded at site using mechanical press and dies to the desired curves and shape to form 2'.0" (605 mm) approximately wide interlocking panels. these panels shall be erected in position and their seams shall be interlocked panels. These panels shall be erected in position and their seams shall be interlocked and pressed to close the seam forming a water tight joint . Minor color chipping/scratching should be rectified by applying Epoxy lacquer. Necessary arrangement including the supply for the installation of fasteners at the end will be there in the scope of the vendor.

The installation should be done by mechanized methods. Vendor has to mobilize required number of Hydra for transportation of sheets and Cranes for the erection of Seamed Sheets.

Adequate precaution shall be taken by the Vendor during the installation process for the safety of their workers. Safety belts, helmets and other safety equipments for the execution of job must be used, wherever required. Working in height panels installation process shall not be carried out in case of wind velocity at site location is above 22 K.M./ Hrs.

The material of galvalume steel shall have the following specifications:

(a) **Material**

Imported Galvalume sheets with coating of Aluminum, Zinc and Silicon with following percentage:

Aluminum 55%	Alloy Coated High Tensile steel.
Zinc: 43.5%	
Silicon 1.5%	

(b) Technical details

i. Standard- color Coated GALVALUME steel complying to ASTM A 792

ii. Base Metal Thickness - 1.20 mm (Tolerance as +/-0.02mm)

iii. Alloy Coating – AZ 150 (Aluminum 55%,Zinc 43.5%,Silicon 1.5%.

iv. Yield strength -350m

v. Paint Coating- Coating Mass of AZ-150 Regular modified Polyester Top Coat 25 Micron & Bottom Coat 12 Micron.

vi. Color pattern- Combination of two colors (Ratio 50% each)

(C) Inspection and testing

Before the sheet is used for roofing at site, samples will be tested at a reputed laboratory for the following:

i. Thickness - 1.30mm

ii. Top coating - 25 micron & bottom coat. 12 micron

iii. Yield/Tensile Strength 350 m

Charges for the same if any shall be born by the contractor.

Besides this the contractor also needs to submit the material test report from the steel mill supplier for each steel coil.

Signature :-
Subject : CN=ASHWIN D, SERIALNUMBER=2035d4fe20bae89488f496e7d7fdab3e3fcc14:
6a393f599e6d567e6c881eb03, ST=KARNATAKA, OID.2.5.4.17=560024, OU=
MANAGEMENT, O=NATIONAL SEEDS CORPORATION LTD, C=IN
User ID : ashwin.d
Serial No : D251AF

(d) Fixtures-: The fixtures like anchor fasteners. Standard Light Hungers. Turbo ventilators ,and skylights shall be designed to suit the requirement of NSC. Each godown to have a combination of Turbo Ventilator (Aluminum) of size 24 inches Capacity 2200 CFM, with a Skylight of 2mm Thick polycarbonate sheet of size 2 foot x 7 foot, to be installed at a distance of 30 foot along the length of the building.	
TESTING OF MATERIAL	
Thickness	
i. Tensile strength	
ii. Coating Mass AZ 150	
Testing charges. If any, shall be born by the contractor.	
STANDARDS:- The Galvalume Steel Suppler shall be ISO certified and shall follow International standard for Galvalame sheet roofing.	
Fixture:- The fixtures like fasteners, turbo ventilators, translucent sheets shall be designed to suit the requirements of NSC.	
(A) Supply & fixing of arched type roof with 1 mm thick Galvalame sheets including skylight (oply corbonate 2 mm thick size 0.60m x 6.00m), 24" Aluminum Turbo ventilators and hangers/ clamp to facilitate 20 to 30 kg point load of light fixtures/ fittings as per norms.	**1650 sqm**
ABSTRACT OF COST FOR SEED GODOWN = 1650 SQM @ Rs.1800 /Sqm	**29,70,000**
Total	**29,70,000**

NOTE-
1. Estimated cost is as per the rate of DSR- 2014 and tentative market rate for NSI items.
2. *The rate shall include the cost of all labour, material, equipment, transport (lead and lift) used in the*
3. *work up to the height of* Floor - V level and all taxes etc as applicable on the work.
4. The contractor shall bear the cost of samples, testing fee, if tested materials outside in laboratory.
5. Basic rate may be quoted for materials, labours and P,O,L, in the Schedule 'E' of tender.
6. Rate should be valid for one year
I/We here by tender my/our rates ---------- % (percent) above the rate for Roofing Work .
I/We here by tender my/our rates ---------- % (percent) below the rate for Roofing Work.

Signature of the Contractor
With seal

Place: -
Date:-.

Name of Authorized Signatory : -- ----------
E-mail Id: ----------
Phone No : ----------
Mob. No. :- ----------
Complete Postal Address: ----------

Signature :-
Subject : CN=ASHWIN D, SERIALNUMBER=2035d4fe20bae89488f496e7d7fdab3e3fcc14:
6a393f599e6d567e6c881eb03, ST=KARNATAKA, OID.2.5.4.17=560024, OU=
MANAGEMENT, O=NATIONAL SEEDS CORPORATION LTD, C=IN
User ID : ashwin.d
Serial No : D251AF

SCHEDULE-'E'

Schedule for basic rate of Materials, Labor and P.O.L. etc **FOR** at site.

SN	Particulars	Unit	Rate	Amount
1	**MATERIAL**			
i	Cement OPC 43 grade	50 kg Bag		
	Cement OPC 53 grade	50 kg Bag		
ii	Cold Twisted steel bars	Qtls.		
iii	Bricks as per availability	.		
	50kg/cm ^{2}	Per Thous		
	30/35 kg /cm ^{2}, local	Per Thous		
iv	Galvalume colour coated sheet 1 mm thick	Qtls		
v	Steel for general structure-Angle, Tee & flat etc.	Qtls		
vi	Stone aggregate			
	Below 12.5 mm nominal size	Cum		
	Above 12.5 mm nominal size	Cum		
	Stone ballast 25 to 40 mm nominal size.	Cum		
	Stone ballast 40 mm – 60 mm nominal size	Cum		
vii	Coarse sand	Cum		
viii	Local sand	Cum		
ix	Moorum	Cum		
x	Good earth	Cum		
2	**Labours**			
i)	Mason (Average)	Per day		
ii)	Carpenter/black smith (average)	Per day		
iii)	Beldar			
3	**P.O.L.**			
i)	Diesel	Litre.		
ii)	Petrol	Litre.		
iii)	Lubricant	Litre.		

Signature :-
Subject : CN=ASHWIN D, SERIALNUMBER=2035d4fe20bae89488f496e7d7fdab3e3fcc14:
6a393f599e6d567e6c881eb03, ST=KARNATAKA, OID.2.5.4.17=560024, OU=
MANAGEMENT, O=NATIONAL SEEDS CORPORATION LTD, C=IN
User ID : ashwin.d
Serial No : D251AF

DRAWINGS:-

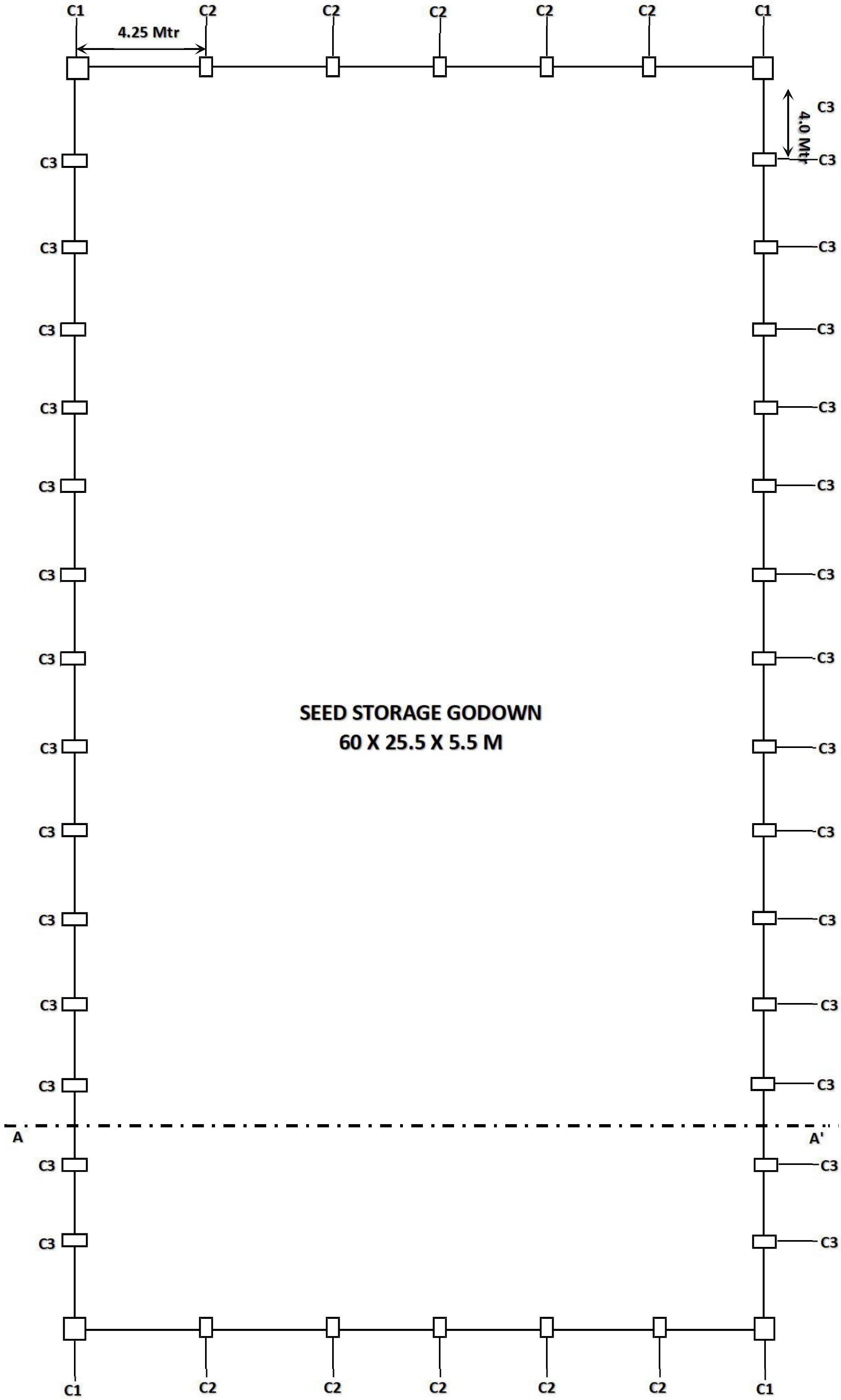

RCC PLAN FOR NSC Haveri Seed Godown

Signature :-
Subject : CN=ASHWIN D, SERIALNUMBER=2035d4fe20bae89488f496e7d7fdab3e3fcc14
6a393f599e6d567e6c881eb03, ST=KARNATAKA, OID.2.5.4.17=560024, OU=
MANAGEMENT, O=NATIONAL SEEDS CORPORATION LTD, C=IN
User ID : ashwin.d
Serial No : D251AF

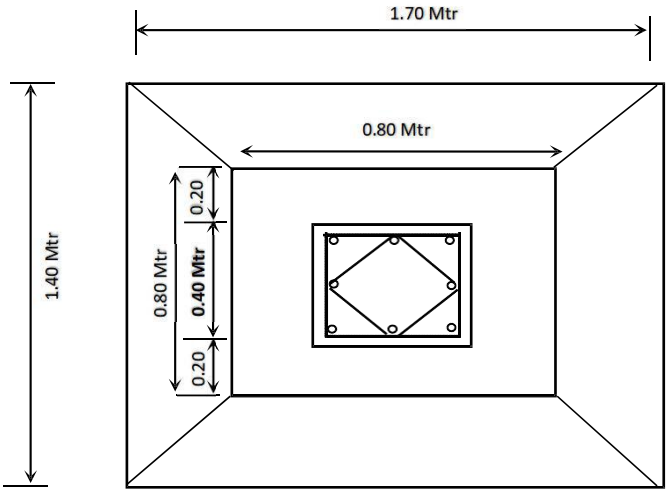

PLAN COLUMN - C1

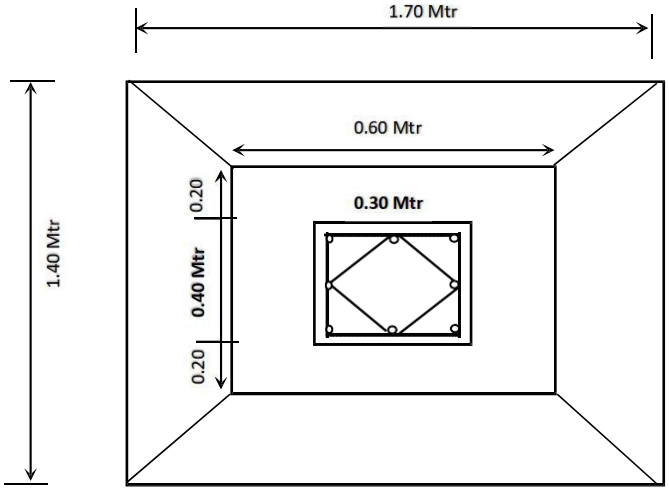

PLAN COLUMN - C2

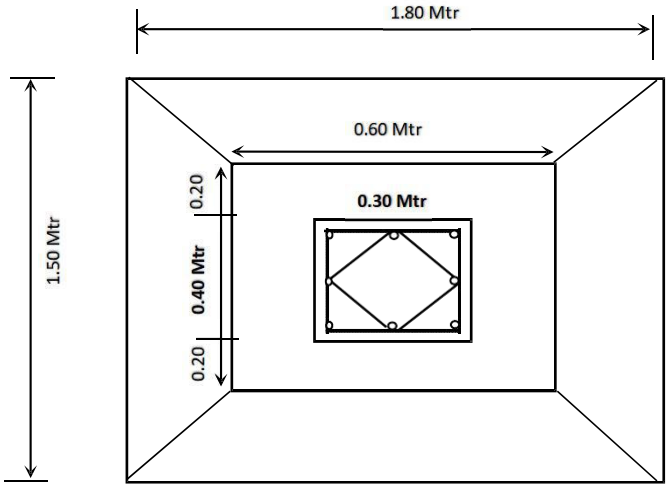

PLAN COLUMN - C3

Signature :-
Subject : CN=ASHWIN D, SERIALNUMBER=2035d4fe20bae89488f496e7d7fdab3e3fcc14:
6a393f599e6d567e6c881eb03, ST=KARNATAKA, OID.2.5.4.17=560026, OU=
MANAGEMENT, O=NATIONAL SEEDS CORPORATION LTD, C=IN
User ID : ashwin.d
Serial No : D251AF

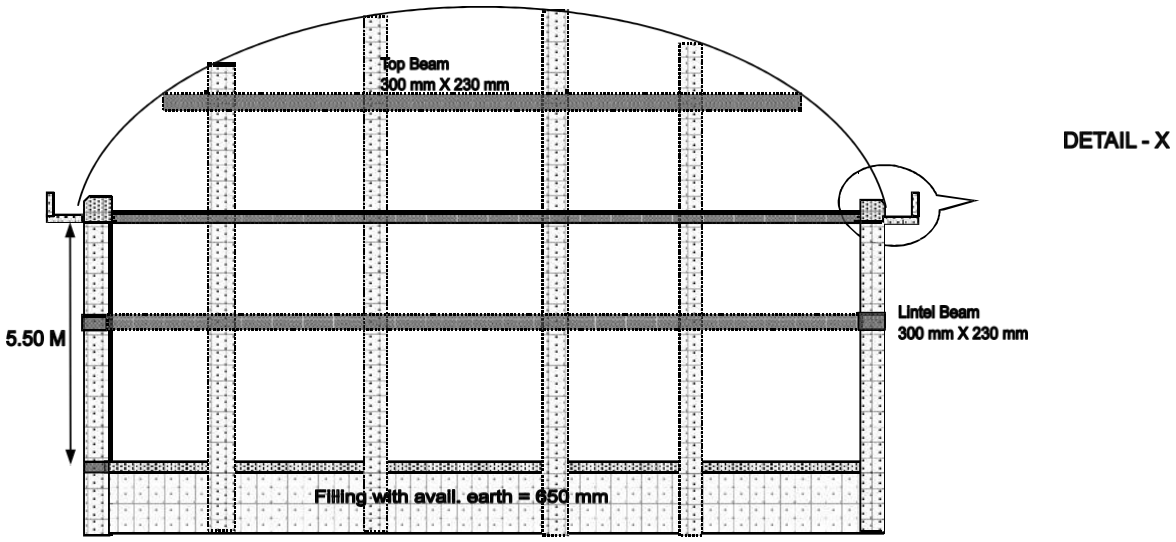

Section A-A'

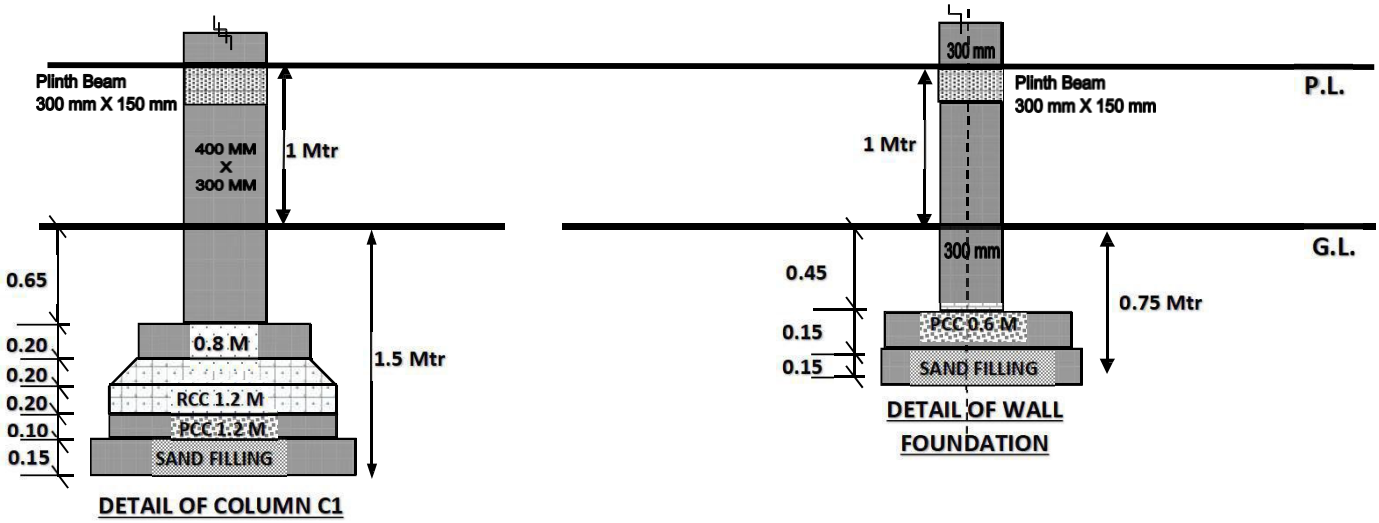

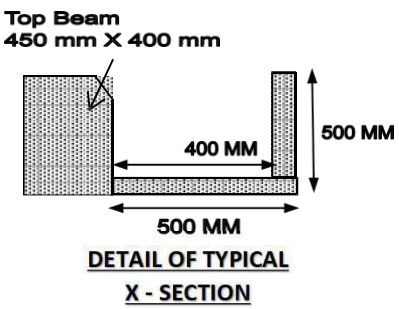

Signature :-
Subject : CN=ASHWIN D, SERIALNUMBER=2035d4fe20bae89488f496e7d7fdab3e3fcc14:
6a393f599e6d567e6c881eb03, ST=KARNATAKA, OID.2.5.4.17=560024, OU=
MANAGEMENT, O=NATIONAL SEEDS CORPORATION LTD, C=IN
User ID : ashwin.d
Serial No : D251AF

LIST FOR TECHNICAL EVALUATION OF TENDER CHECK LIST

SN	Particulars	Remarks / Yes or No
1	Tender fee as per NIT (Non- refundable) :- ₹ 2500/- by online mode.	
2	EMD as per tender :- ₹ 2,70,000/- by online mode.	
3	Certificate of registration of the firm in appropriate class	
	Class –I Eligible up to tender value Rs.15 crores	
	Class –II Eligible up to tender value Rs.3 crores	
	Class –III, IV & V Eligible up to tender value Rs.90, 40 &10 Lakhs respectively	
4	Partnership Deed if Partnership firm.	
5	Authorization for signing if it is limited company or partnership firm.	
6	An affidavit of ownership if proprietary firm/sole traders.	
7	PAN	
7a	GSTIN	
8	Income-tax Return for the current & previous years .	
	ITR-2014-15 - Value	
	ITR-2015-16 - Value	
	ITR-2016-17 - Value	
	Current status-	
9	Name and addresses of the Bank,	
	Account No.,	
	IFS Code.	
10	Copy of registration for :-	
	i) GST/SST/CST/VAT TIN	
	ii) PF, ESI or Labour License	
11	Performance / experience certificate of Department for :-	
	i) Work of super structure with steel frame work roofing with 0.5 mm thick galvalume sheet roofing as given in the item of work.	
	ii) Experience for Colour coated Gal volume sheet range from 0.5 to 1.6mm thick containing special alloy of aluminum, zinc and silicone and turbo ventilators should be as per our tender terms.	
12	Work done certificate for Rs. in lakhs	
	2014-15	
	2015-16	
	2016-17	
	Current status-	
13	Affidavit certificate that not black listed and no arbitration case pending in this office.	
14	NSIC certificate with validity of time and item.	
15	Other document if any in support of the tender.	
16	E- tender document should be digitally signed	
17	Address of the contractor	
	Contact No.	
	E-mail ID	

Signature :-
Subject : CN=ASHWIN D, SERIALNUMBER=2035d4fe20bae89488f496e7d7fdab3e3fcc14:
6a393f599e6d567e6c881eb03, ST=KARNATAKA, OID.2.5.4.17=560024, OU=
MANAGEMENT, O=NATIONAL SEEDS CORPORATION LTD, C=IN
User ID : ashwin.d
Serial No : D251AF